CHALLENGE®

POWER TRANSMISSION

Technical Catalogue

ENGLISH
ISSUE 6

www.challengept.com

CHALLENGE
Never a problem, always a...
CHALLENGE®

CHALLENGE
Roller Chain
ISO
9001
CHALLENGE
10BSS-2 x 5m

Never a problem always a ...

CHALLENGE®

The Challenge logo and symbol are registered marks of CFE Holdings Ltd.
* HTD is a registered trademark of Gates Power Transmission

Technical Catalogue

CHALLENGE PRODUCTS

PRECISION ROLLER CHAIN, IN STEEL, STAINLESS STEEL & ZINC/NICKEL PLATED
LEAF CHAIN
HEAVY DUTY DRIVE CHAIN
WELDED STEEL CHAIN (DRAG AND MILL CHAIN)
FOOD INDUSTRY CHAIN
AGRICULTURAL CHAIN
SPECIAL CHAIN AND ATTACHMENT CHAIN
CONVEYOR CHAIN
BLOCK CHAIN
ENGINEERED BUSH CHAIN
PALM OIL CHAIN
DROP FORGED CHAIN
SUGAR CHAIN
TAPER BORE & PILOT BORE V-PULLEYS
SYNCHRONOUS PULLEYS
POLY V PULLEYS
TAPER BUSHES
MI-LOCK PULLEYS AND BUSHES
WEDGE AND CLASSICAL V-BELTS
TAPER BORED SPROCKETS
PILOT BORED & PLATEWHEEL SPROCKETS
FINISH BORED SPROCKETS
WELD-ON-HUBS AND BOLT-ON-HUBS
HRC COUPLINGS
FFX TYRE COUPLINGS
JAW COUPLINGS
NPX COUPLINGS
RPX COUPLINGS
CHAIN COUPLINGS
SHAFT MOUNTED SPEED REDUCERS (SMSR + TXT)
TORQUE LIMITERS
CLAMPING ELEMENTS
GEAR MOTORS
ELECTRIC MOTORS
MOTOR MOUNTS
SELF LUBE BEARING UNITS
PLUMMER BLOCKS
BEARINGS

Challenge Group Companies

AUSTRALIA
Challenge Power Transmission (Aust) Pty Ltd
B11, Scoresby Industry Park
Janine Street
Scoresby
Victoria 3179
Australia
Tel: (03) 9763 6701 Fax: (03) 9764 0890
Email: aussales@challengept.com

CZECH REPUBLIC
Challenge PT (Czech) s.r.o.
Hulínská 1799, areál Magneton
767 01 Kroměříž
Česká Republika
Tel: +420 573 334 106 Fax: +420 573 330 556
Email: czsales@challengept.com

GERMANY
Challenge Power Transmission GmbH
In der Neuwies 1
D-35745 Herborn
Germany
Tel: +49 2772 575860 Fax: +49 2772 5758620
Email: desales@challengept.com

IRELAND
Challenge Power Transmission (Ireland) Ltd
Unit 202
Holly Road
Western Industrial Estate
Dublin 12
Eire
Tel: +353 1 4566311 Fax: +353 1 4566312
Email: ireland@challengept.com

CHINA (Shijiazhuang)
Challenge Power Transmission (SHZ) Plc
South of Daxizhang
High Technology Developing Area
Shijiazhuang 050035
China
Tel: +86 311-85385510 Fax: +86 311 8538 5590
Email: cnsales@challengept.com

SOUTH AFRICA
Challenge Power Transmission Africa (Pty) Ltd
Cnr Estee Ackermann and Yaldwyn Streets
Jet Park, Boksburg
Gauteng, Johannesburg
1459
South Africa
Tel: +27 11 3976115 Fax: + 27 11 3978494
Email: sasales@challengept.com

UNITED KINGDOM
Challenge Power Transmission Ltd
Merryhills Enterprise Park
Park Lane
Wolverhampton
WV10 9TJ
United Kingdom
Tel: +44 1902 866116 Fax: +44 1902 866117
Email: uk@challengept.com

CHINA (Ningbo)
Challenge Power Transmission (Ningbo) Ltd
Bao Zhan Avenue, Xiao Bai Village,
Dong Wu Town, Yin Zhou District, Ningbo City,
Zhejiang Province, China
Tel: +86 574 8833 4378 Fax: +86 574 8833 4379
Email: ningbo.sales@challengeproduction.com

Technical Information

Engineering Units

SI units

The table below shows units corresponding to the International system of units, more commonly called SI (Système International d'Unités) From these , all other units can be derived.

quantity	unit	metric symbol	imperial symbol
mass	kilogram	kg	pound (lb)
length	metre	m	inch (in)
time	second	s	s
temperature	Kelvin	K	Fahrenheit (F)
electric current	Ampere	A	A

Some common units in general use appertaining to Power Transmission

quantity	unit	metric symbol	imperial symbol
force	Newton kilogram force	N kgf	pound force (lbf)
torque	Newton metre kilogram metre	Nm kgf.m	pound inch (lbf.in) pound foot (lbf.ft)
power	Watt or kilowatt	W kW	horsepower hp
pressure	Pascal bar	Pa bar	lbf/in^2 or psi
temperature	degree Celsius	°C	°F
frequency	Hertz	Hz	cycles/second (c/s)
speed – linear	metres/second	m/s	feet/min
speed – angular	revolutions per minute (rpm)	rev/min	rev/min
inertia	MR^2	kg.m^2	lb.in^2 lb.ft^2
electrical potential	Volt	V	
electrical resistance	Ohm	Ω	
electrical capacity	Farad	F	

Common multiples and sub-multiples

prefix	symbol	factor
micro	μ	÷ 1,000,000
milli	m	÷ 1,000
kilo	k	× 1,000
mega	M	× 1,000,000
tera	T	× 1,000,000,000,000

Common conversion factors

The factors given below are typical of those used in Power Transmission engineering :-

Metric to Imperial are on the left and the converse on the right

Length

millimetres (mm) x 0.0394 = inches (ins) — inches x 25.4 = mm

metres (m) x 39.37 = inches — inches x 0.0254 = metres (m)

metres x 3.281 = feet (ft) — feet x 0.305 = metres

kilometres x 0.6213 = miles — miles x 1.61 = kilometres

Force

Newtons x 0.225 = pound force (lbf) — lbf x 4.45 = Newtons (N)

kilogram force (kgf) x 2.205 = lbf — lbf x 0.454 = kgf

kgf x 9.81 = Newtons

N x 0.102 = kgf

Torque

Newton metre (Nm) x 0.735 = pounds feet (lbf.ft)

Newton metre (Nm) x 8.85 = pounds inches (lbf.ins)

kilogram force metre (kgf.m) x 9.81 = Newton metre

Power

kilowatt (kW) x 1.34 = horse power (hp) — hp x 0.746 = kW

Note – the French Cheval-Vapeur (CV) and the German Pferdestarke (PS) are virtually the same value of horse power.

To be exact, hp x 0.98 = CV or PS

Inertia

kg.m^2 x 23.73 = lb.ft^2

Temperature

$°C = \frac{5}{9} \times (°F - 32)$ — $°F = \frac{9}{5} \times °C + 32$

Pi (π)

The ratio between the circumference and diameter of a circle is π

diameter x π = circumference

π = 3.1416

so diameter x 3.1416 = circumference

Common formulae useful in Power Transmission

Torque, Power and Speed

$$\text{Power (kW)} = \frac{\text{Torque (Nm) x rev/min}}{9550}$$

$$\text{Torque (Nm)} = \frac{\text{Power (kW) x 9550}}{\text{rev/min}}$$

'V' - Drive shaft/bearing loads

The following simple formulae give a good indication as to the static and dynamic loads imposed on shafts/bearings by 'V'- Belts

It is useful formulae being based on the actual setting force used to tension the drive

Ts = static tension

Tc = centrifugal tension

Td = dynamic tension

Ts = 16 x 2 x P x B = N

Tc = M x S² x 2 x B = N

Td = Ts – Tc = N

where :-

16 = a constant

2 = the tight and slack sides of the belt

P = 80% of the higher tensioning force figure (1.3 x column) - kgf (from page 148 in the CHALLENGE technical catalogue)

B = the number of belts on the drive

M = belt mass per unit length - kilogram per metre - kg/m (from page 132 in the CHALLENGE technical catalogue)

S = belt speed in metres per second (m/s)

$$S = \frac{d \times n}{19100} \text{ m/s}$$

whereby :-

d = small pulley pitch diameter – mm

n = rotational speed of small pulley – rev/min

Example

Calculate the dynamic tension from the following drive.

90kW 1440 rev/min direct start electric motor to a Belt Conveyor running at 400 rev/min for 12 hours/day carrying copper ore and absorbing 81 kW.

Motor shaft is 75 mm, conveyor shaft 105 mm. 1200 mm drive centres

The drive chosen is :-

Motor Pulley: 280 x 5 SPB with a 3535 / 75 mm bore taper bush

Conveyor pulley: 1000 x 5 SPB with a 4545 / 105 mm bore taper bush

Belts: 5 off SPB 4500 Wedge Belts giving 1191 mm drive centres

Calculating the Dynamic Tension

Ts = 16 x 2 x P x B

= 16 x 2 x (8.2 x 9.81 x 0.80) x 5 = **10297 N**

Tc = M x S² x 2 x B

whereby :-

M = **0.19 kg/m**

$$S = \frac{d \times n}{19100} = \frac{280 \times 1440}{19100} = \mathbf{21.11\ m/s}$$

Tc = 0.19 x 21.11² x 2 x 5 = **847 N**

Td = Ts – Tc

Td = 10297 – 847

= **9450 N**

The calculation of weights

Weight is mass measured vertically and simple empirical formulae can be used to calculate the weight of round and rectangular objects:

Round objects

diameter (mm) squared x length (m) x factor = weight (kgf)

factor for mild steel	=	0.00617
factor for stainless steel	=	0.00636
factor for cast iron	=	0.00598

Example

calculate the weight of a 25mm diameter rod of mild steel with a length 500 mm.

25² x 0.5 x 0.00617 = **1.928 kgf**

Rectangular objects

depth (mm) x height (mm) x length (m) x factor = weight (kgf)

factor for mild steel	=	0.00785
factor for stainless steel	=	0.00809
factor for cast iron	=	0.00761

Example

calculate the weight of a rectangular mild steel bar 25 mm x 35 mm with length 600 mm

25 x 35x 0.6 x 0.00785 = **4.121 kgf**

Contents

Chain

Chain Features	1
Roller Chain	**2**
British Standard Roller Chain	4
ANSI Standard Roller Chain	5
ANSI Heavy Duty Roller Chain	6
ANSI Cottered Series Roller Chain	7
ANSI Cottered Heavy Duty Series Roller Chain	8
Chain Breakers	8
ANSI Straight Side Plate Roller Chain	9
Chain Pullers	9
British Standard Straight Side Plate Roller Chain	10
Special Transmission Roller Chain	11
Extended Pin Chain	11
Hollow Pin Roller Chain	12
Special Chain with “U” Attachments	13
Special Chain with “U” Attachments and Rubber Elements	14
Special Roller Chain	15
Special Chain with Driver	15
Accumulation Chain	16
Stainless Steel Transmission Roller Chain	19
Nickel and Zinc Plated Transmission Roller Chain	20
Side Bow Chain with Loose and Conical Pins	21
Roller Chain Attachments	22
Double Pitch Chain	**24**
Double Pitch Transmission Chain	24
Double Pitch Conveyor Chain	25
Double Pitch Attachments	26
Double Pitch Special Chain	27
Double Pitch Extended Pin Chain	28
Double Pitch Hollow Pin Chain	28
Leaf Chain	**29**
LH / BL Series Leaf Chain	30
LL / EL Series Leaf Chain	32
AL Series Leaf Chain	33
FLC Series Leaf Chain	34
Clevis Pins	35
Heavy Duty Drive Chains RO Series	**36**
Timber Chain	**37**
Welded Steel Chain (offset side bar)	37
Welded Steel Chain Attachments (offset side bar)	38
Offset Side Bar Roller Chain	40
Straight Side Bar Roller Chain	40
Welded Steel Drag Chain	41
Sharp Top Chain	42
Food Industry Chain	**45**
H2 Hollow Pin Chain	45
Agricultural Chain	**47**
Steel Agricultural Chain	47
Agricultural Chain Attachments	48
Conveyor Chain	**58**
Benefits of Challenge Spin Riveted Conveyor Chain	59
BS Z Series with Solid Pin Chain	60
BS ZC Series with Hollow Pin Chain	61
BS Z/ZC Series Attachments Chain	62
BS ZE Series Deep Link Chain	63
M Series Metric Solid Pin Chain	64
M Series Chain Attachments	67
MC Series Hollow Pin Chain	70
MT/ME Series Deep Link Chain	71
FV/C Series Metric Solid Pin Chain	74
FV/CC Series Metric Hollow Pin Chain	76
FV Series Chain Attachments	78
FVT/CE Series Metric Deep Link Chain	80
FV/CR Series Metric Scraper Chain	82
Conveyor Chain Attachment Chain Designations	83
Block Chain	**84**
NF Block Chain	84
Engineered Bush Chains	**85**
Engineered Bush Chains	85
Engineered Bush Chains Attachments	86
Drop Forged Chain	**88**
Rivetless Forged Chain	88
Drop Forged Chain Links	89
Palm Oil Chain	**91**
Benefits of Spin Riveted Palm Oil Chain	91
Solid Pin	92
Hollow Pin	93
Sugar Chain	**94**
Benefits of Challenge Sugar Chain	95
Bagasse Chain	96
Cane Carrier Chain	97
Welded Steel Chain	98
Rivetless Forged Chain	98

Sprockets

Sprocket Features	101
BS Taper Bore Sprockets	102
BS Pilot Bore Sprockets	109
BS Pilot Bore Plate Wheels	124
Taper Bore Double Simplex Sprockets	139
Pilot Bore Double Simplex Sprockets	140
Idler Sprockets	141
ANSI Pilot Bore Sprockets	142

Belts

Belt Features	151
Belt Specifications	151
Classical V-Belts	152
Classical CRE V-Belts	156
Wedge Belts	157
CRE Wedge Belts	158
Narrow V Belts	159
Wedge Belt Selection Procedure	160
Wedge Belt Selection Data	162
Belt Tensioning	168
Technical Information & installation	169
Trouble Shooting	170
Classical Timing Belts	171
Curved Tooth Timing Belts	174

Pulleys

Pulley Features	179
General Information	180
V-Pulleys	181
Variable Speed Pulleys	194
Mi-Lock Pulleys	196
Poly-V Pulleys	197
Poly-V Section J	198
Poly-V Section K	201
Poly-V Section L	203
Timing Pulleys - Taper Bore	206
HTD® Pulleys - Taper Bore	210
Metric Timing Pulleys - Pilot Bore	215
Timing Pulleys - Pilot Bore	218
HTD® Pulleys - Pilot Bore	223

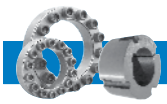

Shaft Fixings

Shaft Fixing Features	231
Taper Bush Range and Specifications	232
Taper Bush Installation and Removal	234
Taper Bushes - Metric	235
Taper Bushes - Imperial	239
Taper Bush Adaptors	245
Bolt-on-Hubs	246
Weld-on-Hubs	247
Shaftlock Sizes 01 - 22	250

Shaft Couplings

Shaft Coupling Features	267
FFX Tyre Coupling Selection	268
FFX Tyre Coupling Data	270
FFX Tyre Coupling Installation	271
HRC Couplings	273
HRC Coupling Selection	274
HRC Coupling Data	275
NPX Couplings	276
NPX Coupling Selection	277
NPX Coupling Data	278
RPX Couplings	281
RPX Coupling Selection	282
RPX Coupling Data	283
Jaw Couplings	286
Chain Couplings	287

Torque Limiters

Features	289
Range and Information	290
Dimensions	291
Selection Procedure	292

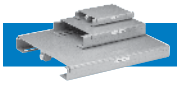

Motor Mounts

Features	295
Rapid Fit	296
Standard	297
Slide Rails	298

Electric Motors

Electric Motor Features	301
Three Phase Motors General Information	302
Degrees of Protection	303
Conditions of Installation	304
Standards and Regulations	305
Three Phase Starting Options	306
Components	307
Mounting Arrangements	308
Technical Data EFF2	309
Cable Entry and Bearing Sizes	311
Three Phase Mounting and Overall Dimensions	312
Single Phase General Information	317
Single Phase Technical Data	318
Single Phase Mounting and Overall Dimensions	319
Single Phase Connections	321

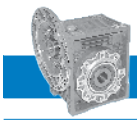

Worm Gear Units

Worm Gear Unit Features	323
Worm Gear Versions	324
Direction of Rotation / Critical Applications	325
Installation and Lubrication	326
Radial Loads	327
Possible Motor Flanges	328
PC and CMRV Combinations	329
Efficiency	330
Mesh Data	331
PC Materials and Design Features	332
Mounting Positions	333
Execution of Double Reduction	334
CMRV Performance	335
PC-CMRV Performance	338
CMRV-CMRV Performance	340
Dimensions	344
Dimensions of Output Flanges	345
PC and CMRV Dimensions	346
CMRV and CMRV Dimensions	347
CRV and CRV-CMRV Dimensions	348
Output Shafts and CTA Torque Arms	349
Motor Input Flanges PAM B5 and PAM B14	350
Cover and Shaft Sleeves	351
Drive Design	352

Shaft Mounted Speed Reducers

Metric Range Features	355
Selection Procedure	356
Power Ratings	358
Wedge Belt Drives for the 1440 rev/min Electric Motors	359
SMSR Dimensions	368
Motor Mount Dimensions	370
Output Hub Details	371
Challenge Grip-Loc Shaft Mounted Speed Reducer locking system	372
Installation	373
Lubrication	374
Backstop Installation	375
Maintenance Parts Product Codes	376
TXT Range Features	379
Selection Procedure	380
Application Classification	381
TXT Power Rating	384
Belt Drives for 1750 rpm motors	387
TXT SMSR Dimensions	395
Metric input Shaft and Output Straight Bore Hub	395
TXT Output Hub Bushings	396
TXT SMSR Installation	397
Lubrication	399
Exploded view of a TXT reducer	401

Bearing Units

Features	403
Pillow Blocks	404
4 Hole Flange Units	406
2 Hole Flange Units	408
Take-Up Units	409
Inserts	410

Plummer Blocks

Plummer Blocks Features	413
General Information	414
SNU 500-600 Series	416
Technical Information	418

Bearings

Bearing Features	421
General Information	422
6000 Series	423
6200 Series	424
6300 and 6800 Series	425
6900 and 1600 Series	426
R Series	427
Metric Taper Bearings	428
Imperial Taper Bearings	429

Contact Information / Terms and Conditions

Challenge Group Companies	432
Terms & Conditions	433

Roller Chain

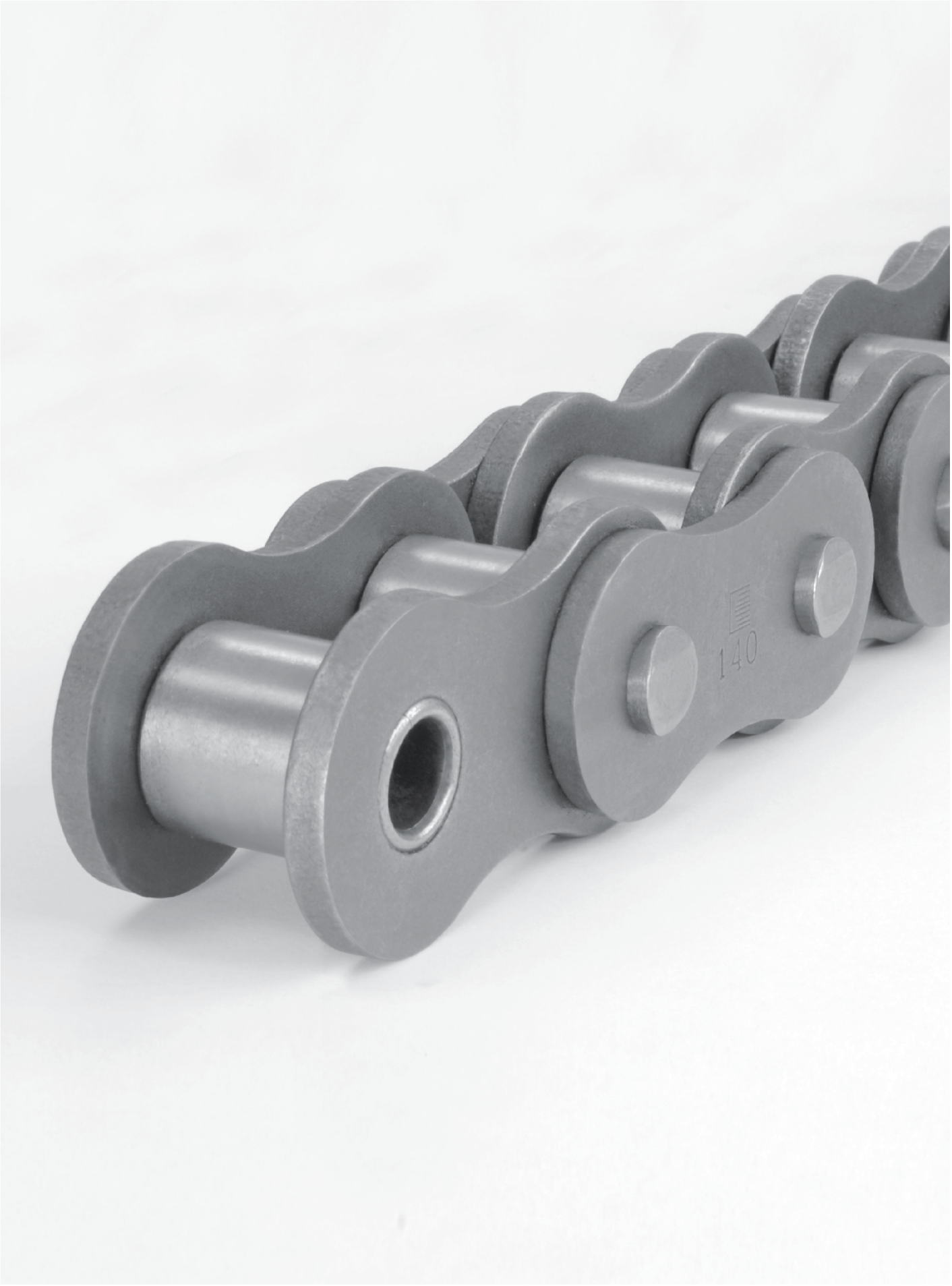

Features

Challenge offer a large range of various types of chain including – Transmission, Conveyor, Agricultural, Leaf and many types of special chains

Challenge Transmission Roller chain

Challenge roller chain is supplied in five meter boxes including one connecting link. Some sizes are available on reels or in 10ft boxes.

The range includes – ISO, BS, ANSI and many bespoke chains.

ISO roller chain – standard, straight side plate, extended pin, hollow pin, stainless steel, nickel plated, zinc plated, double pitch and specials.

ANSI roller chain – standard, heavy duty, cottered, cottered heavy duty, straight side plate, extended pin, stainless steel, nickel plated, zinc plated, double pitch (including extended pin, hollow pin) and specials.

Roller chain attachments – cover a large range for both ISO and ANSI chain, Timber, Agricultural and Conveyor chain.

Challenge transmission chains have a longer life because:

- **Pins** – manufactured from case hardened chrome manganese molybdenum steel. This increases wear resistance with more shock absorption ability.
- **Pre-stretched** – “fit and forget”.
- **Ball swaged holes** – combats fatigue failure.
- **Shot peened rollers and side plates** – reduces fatigue failure.
- **Deep waisted side plates** – increases breaking load and reduces stress.
- **Solid rollers** – prolongs wear life.

HERE'S A CHALLENGE ...

Who's got the **Perfect Spin** to bowl your customers over?

CHALLENGE X Series Spin Riveted Transmission Chain

Never a problem always a ...

Lock in to:

Secure source of supply • Superior service

Product quality and reliability • Manufacturers prices

Securing more than just your profits

Never a problem always a ...

CHALLENGE®

www.challengept.com

Roller Chain

The Benefits...

CHALLENGE X Series Transmission Chain

- **Spin Riveted Case Hardened Pins in Alloy Steel**
  - For optimum life
- **Pre-stretched** - Fit and forget
- **Ball swaged holes** - Combats fatigue
- **Shot peened**
  - Produces strong surface and reduced fatigue
- **Deep waisted side plates** - Reduces stress
- **Rollers from seamless tube**
  - For strength and long life

The X Series Range...

20B-1X	32B-2X
20B-1XGL	32B-3X
20B-2X	40B-1X
20B-2XGL	40B-1XGL
20B-3X	40B-2X
20B-3XGL	40B-3X
24B-1X	48B-1X
24B-1XGL	48B-1XGL
24B-2X	48B-2X
24B-3X	48B-3X
28B-1X	56B-1X
28B-1XGL	56B-2X
28B-2X	56B-3X
28B-3X	64B-1X
32B-1X	64B-2X
32B-1XGL	64B-3X

Also in the Roller Chain range

Roller Chain
British Standard Roller Chain
ANSI Standard Roller Chain
ANSI Heavy Duty Roller Chain
ANSI Cottered Series Roller Chain
ANSI Cottered Heavy Duty Series Roller Chain
ANSI Straight Side Plate Roller Chain
British Standard Straight Side Plate Roller Chain
Chain Breakers
Timing Chain
Bush Chain
Bicycle Chain
Bicycle Chain/Connecting Links
Roller Chain with Extended Pins
Special Transmission Roller Chain
Hollow Pin Roller Chain
Special Chain with "U" Elements
Special Chain with "U" and Rubber Elements
Transport Chain
Special Chain with Driver
Stainless Steel Transmission Roller Chain
Side Bow Chain
Nickel & Zinc Plated Transmission Roller Chain
Roller Chain Attachments

Double Pitch Chain
Double Pitch Transmission Chain
Double Pitch Conveyor Chain
Double Pitch Attachments
Double Pitch Special Chain
Double Pitch Extended Pin Chain
Double Pitch Hollow Pin Chain

Leaf Chain
LH / BL Series Leaf Chain
LL Series Leaf Chain
AL Series Leaf Chain
FL Series Leaf Chain
Clevis Pins
Special Leaf Chain with Hollow Pin

Timber Chain
Welded Steel Chain
Welded Steel Chain Attachments (offset sidebar)
Welded Steel Chain (offset side bar)
Offset Sidebar Roller Chain
Straight Sidebar Roller Chain
Welded Steel Drag Chain
Drag Chain Attachments

Agricultural Chain
Steel Agricultural Chain
Agricultural Chain Attachments

Conveyor Chain
BS Z Series with Solid Pin Chain
BS ZC Series with Hollow Pin Chain
BS Z/ZC Series Attachments Chain
BS ZE Series Deep Link Chain
M Series Metric Solid Pin Chain
M Series Chain Attachments
MC Series Hollow Pin Chain
MT/ME Series Deep Link Chain
FV/C Series Metric Solid Pin Chain
FV/C Series Metric Hollow Pin Chain
FV/C Series Chain Attachments
FVT/CE Series Metric Deep Link Chain
FV/CR Series Metric Scraper Chain
Special Conveyor Chain
Special Conveyor Chain
Conveyor Chain Attachment Chain Designations

Every effort has been taken to ensure that the data listed in this catalogue is correct. Challenge accepts no liability for any inaccuracies or damage caused.

CHALLENGE®

Roller Chain

British Standard Roller Chain

BS228, ISO R606, DIN 8187

BS Roller Chain

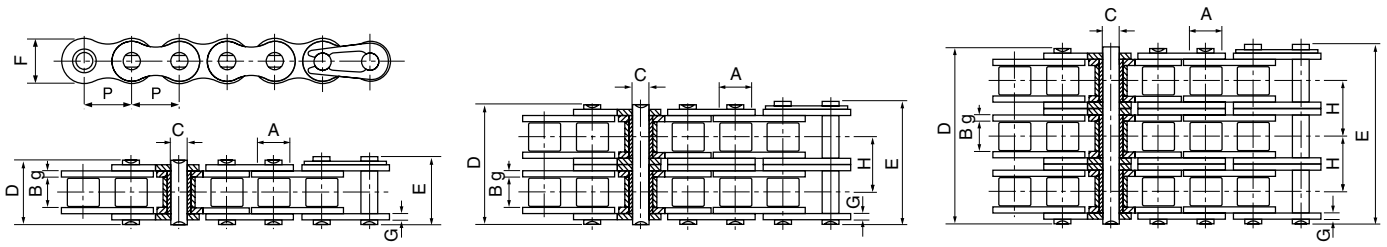

ISO Chain number	Pitch P	Roller diameter A	Width between inner plates B	Pin diameter C	Pin length D	Pin length E	Inner plate height F	Plate thick-ness g/G	Trans-verse pitch H	Minimum tensile strength kN	Average tensile strength kN	Weight kg/m
SIMPLEX												
04B-1	6.000	4.00	2.80	1.85	6.80	7.80	5.00	0.60	-	3.00	3.20	0.11
05B-1	8.000	5.00	3.00	2.31	8.20	8.90	7.10	0.80	-	5.00	5.90	0.20
06B-1 SSP	9.525	6.35	5.72	3.28	13.15	14.10	8.20	1.30	-	9.00	10.40	0.41
08B-1	12.700	8.51	7.75	4.45	16.70	18.20	11.80	1.60	-	18.00	19.40	0.69
10B-1	15.875	10.16	9.65	5.08	19.50	20.90	14.70	1.70	-	22.40	27.50	0.93
12B-1	19.050	12.07	11.68	5.72	22.50	24.20	16.00	1.85	-	29.00	32.20	1.15
16B-1	25.400	15.88	17.02	8.28	36.10	37.40	21.00	4.15/3.1	-	60.00	72.80	2.71
*20B-1	31.750	19.05	19.56	10.19	41.30	45.00	26.40	4.5/3.5	-	95.00	106.70	3.70
*24B-1	38.100	25.40	25.40	14.63	53.40	57.80	33.20	6.0/4.8	-	160.00	178.00	7.10
*28B-1	44.450	27.94	30.99	15.90	65.10	69.50	36.70	7.5/6.0	-	200.00	222.00	8.50
*32B-1	50.800	29.21	30.99	17.81	66.00	71.00	42.00	7.0/6.0	-	250.00	277.50	10.25
*40B-1	63.500	39.37	38.10	22.89	82.20	89.20	52.96	8.5/8.0	-	355.00	394.00	16.35
*48B-1	76.200	48.26	45.72	29.24	99.10	107.00	63.80	12.0/10.0	-	560.00	621.60	25.00
*56B-1	88.900	53.98	53.34	34.32	114.60	123.00	77.80	13.5/12.0	-	850.00	940.00	35.88
*64B-1	101.600	63.50	60.96	39.40	130.00	138.50	90.17	15.0/13.0	-	1120.00	1240.00	46.50
DUPLEX												
04B-2	6.000	4.00	2.80	1.85	12.00	13.00	5.00	0.60	-	4.68	5.50	0.18
05B-2	8.000	5.00	3.00	2.31	13.90	14.50	7.10	0.80	5.64	7.80	10.20	0.33
06B-2 SSP	9.525	6.35	5.72	3.28	23.40	24.40	8.20	1.30	10.24	16.90	18.70	0.77
08B-2	12.700	8.51	7.75	4.45	31.20	32.20	11.80	1.60	13.92	32.00	38.70	1.34
10B-2	15.875	10.16	9.65	5.08	36.10	37.50	14.70	1.70	16.59	44.50	56.20	1.84
12B-2	19.050	12.07	11.68	5.72	42.00	43.60	16.00	1.85	19.46	57.80	66.10	2.31
16B-2	25.400	15.88	17.02	8.28	68.00	69.30	21.00	4.15/3.1	31.88	106.00	133.00	5.42
*20B-2	31.750	19.05	19.56	10.19	77.80	81.50	26.40	4.5/3.5	36.45	170.00	211.20	7.20
*24B-2	38.100	25.40	25.40	14.63	101.70	106.20	33.20	6.0/4.8	48.36	280.00	319.20	13.40
*28B-2	44.450	27.94	30.99	15.90	124.60	129.10	36.70	7.5/6.0	59.56	360.00	406.80	16.60
*32B-2	50.800	29.21	30.99	17.81	124.60	129.60	42.00	7.0/6.0	58.55	450.00	508.50	21.00
*40B-2	63.500	39.37	38.10	22.89	154.50	161.50	52.96	8.5/8.0	72.29	630.00	711.90	32.00
*48B-2	76.200	48.26	45.72	29.24	190.40	198.20	63.80	12.0/10.0	91.21	1000.00	1130.00	50.00
*56B-2	88.900	53.98	53.34	34.32	221.20	229.60	77.80	13.5/12.0	106.60	1600.00	1760.00	71.76
*64B-2	101.600	63.50	60.96	39.40	249.90	258.40	90.17	15.0/13.0	119.89	2000.00	2200.00	93.00
TRIPLEX												
05B-3	8.000	5.00	3.00	2.31	19.50	20.20	7.10	0.80	5.64	11.10	13.80	0.48
06B-3 SSP	9.525	6.35	5.72	3.28	33.50	34.60	8.20	1.30	10.24	24.90	30.10	1.16
08B-3	12.700	8.51	7.75	4.45	45.10	46.10	11.80	1.60	13.92	47.50	57.80	2.03
10B-3	15.875	10.16	9.65	5.08	52.70	54.10	14.70	1.70	16.59	66.70	84.50	2.77
12B-3	19.050	12.07	11.68	5.72	61.50	63.10	16.00	1.85	19.46	86.70	101.80	3.46
16B-3	25.400	15.88	17.02	8.28	99.80	101.20	21.00	4.15/3.1	31.88	160.00	203.70	8.13
*20B-3	31.750	19.05	19.56	10.19	114.20	117.90	26.40	4.5/3.5	36.45	250.00	290.00	10.82
*24B-3	38.100	25.40	25.40	14.63	150.10	154.60	33.20	6.0/4.8	48.36	425.00	493.00	20.10
*28B-3	44.450	27.94	30.99	15.90	184.20	188.70	36.70	7.5/6.0	59.56	530.00	609.50	24.92
*32B-3	50.800	29.21	30.99	17.81	183.20	188.20	42.00	7.0/6.0	58.55	670.00	770.50	31.56
*40B-3	63.500	39.37	38.10	22.89	226.80	233.80	52.96	8.5/8.0	72.29	950.00	1092.50	48.10
*48B-3	76.200	48.26	45.72	29.24	281.60	289.40	63.80	12.0/10.0	91.21	1500.00	1710.00	75.00
*56B-3	88.900	53.98	53.34	34.32	327.80	336.20	77.80	13.5/12.0	106.60	2240.00	2240.00	107.64
*64B-3	101.600	63.50	60.96	39.40	369.80	378.30	90.17	15.0/13.0	119.89	3000.00	3300.00	139.50

* X-Series chains with spin riveted pins also available in these sizes.
SSP = Straight Side Plate Chain

Standard boxed lengths are 5 metres or 10 feet.
Each box contains one CL. Special lengths available.

All dimensions in millimetres unless otherwise stated.

Every effort has been taken to ensure that the data listed in this catalogue is correct. Challenge accepts no liability for any inaccuracies or damage caused.

Roller Chain

ANSI Standard Roller Chain

ANSI B29.1, ISO R606, DIN 8188

ANSI Roller Chain

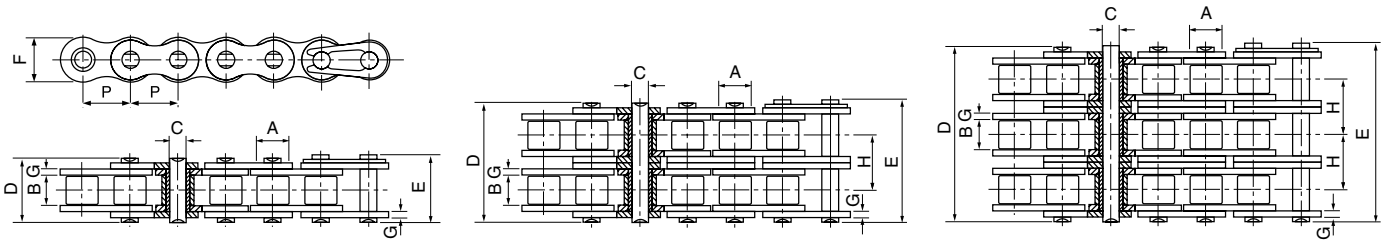

ANSI Chain number	Pitch P	Roller diameter A	Width between inner plates B	Pin diameter C	Pin length D	Pin length E	Inner plate height F	Plate thick-ness g/G	Trans-verse pitch H	Minimum tensile strength kN	Average tensile strength kN	Weight kg/m
SIMPLEX												
*15-1R	4.763	2.48	2.38	1.62	6.10	6.90	4.30	0.60	-	1.8	2.0	0.08
*25-1R	6.350	3.30	3.18	2.31	7.90	8.40	6.00	0.80	-	3.5	4.6	0.15
*35-1R	9.525	5.08	4.77	3.58	12.40	13.17	9.00	1.30	-	7.9	10.8	0.33
41-1R	12.700	7.77	6.25	3.58	13.75	15.00	9.91	1.30	-	6.7	12.6	0.41
40-1R	12.700	7.95	7.85	3.96	16.60	17.80	12.00	1.50	-	14.1	17.5	0.62
50-1R	15.875	10.16	9.40	5.08	20.70	22.20	15.09	2.03	-	22.2	29.4	1.02
60-1R	19.050	11.91	12.57	5.94	25.90	27.70	18.00	2.42	-	31.8	41.5	1.50
80-1R	25.400	15.88	15.75	7.92	32.70	35.00	24.00	3.25	-	56.7	69.4	2.60
100-1R	31.750	19.05	18.90	9.53	40.40	44.70	30.00	4.00	-	88.5	109.2	3.91
120-1R	38.100	22.23	25.22	11.10	50.30	54.30	35.70	4.80	-	127.0	156.3	5.62
140-1R	44.450	25.40	25.22	12.70	54.40	59.00	41.00	5.60	-	172.4	212.0	7.50
160-1R	50.800	28.58	31.55	14.27	64.80	69.60	47.80	6.40	-	226.8	278.9	10.10
180-1R	57.150	35.71	35.48	17.46	72.80	78.60	53.60	7.20	-	280.2	341.8	13.45
200-1R	63.500	39.68	37.85	19.85	80.30	87.20	60.00	8.00	-	353.8	431.6	16.15
240-1R	76.200	47.63	47.35	23.81	95.50	103.00	72.39	9.50	-	510.3	622.5	23.20
DUPLEX												
*25-2R	6.350	3.30	3.18	2.31	14.50	15.00	6.00	0.80	6.40	7.0	8.6	0.28
*35-2R	9.525	5.08	4.77	3.58	22.50	23.30	9.00	1.30	10.13	15.8	19.7	0.63
41-2R	12.700	7.77	6.25	3.58	25.70	26.90	9.91	1.30	11.95	13.3	16.9	0.81
40-2R	12.700	7.95	7.85	3.96	31.00	32.20	12.00	1.50	14.38	28.2	35.9	1.12
50-2R	15.875	10.16	9.40	5.08	38.90	40.40	15.09	2.03	18.11	44.4	58.1	2.00
60-2R	19.050	11.91	12.57	5.94	48.80	50.50	18.00	2.42	22.78	63.6	82.1	2.92
80-2R	25.400	15.88	15.75	7.92	62.70	64.30	24.00	3.25	29.29	113.4	141.8	5.15
100-2R	31.750	19.05	18.90	9.53	76.40	80.50	30.00	4.00	35.76	177.0	219.4	7.80
120-2R	38.100	22.23	25.22	11.10	95.80	99.70	35.70	4.80	45.44	254.0	314.9	11.70
140-2R	44.450	25.40	25.22	12.70	103.30	107.90	41.00	5.60	48.87	344.8	427.5	15.14
160-2R	50.800	28.58	31.55	14.27	123.30	128.10	47.80	6.40	58.55	453.6	562.4	20.14
180-2R	57.150	35.71	35.48	17.46	138.60	144.40	53.60	7.20	65.84	560.5	695.0	29.22
200-2R	63.500	39.68	37.85	19.85	151.90	158.80	60.00	8.00	71.55	707.6	877.4	32.24
240-2R	76.200	47.63	47.35	23.81	183.40	190.80	72.39	9.50	87.83	1020.6	1255.3	45.23
TRIPLEX												
*25-3R	6.350	3.30	3.18	2.31	21.00	21.50	6.00	0.80	6.40	10.5	12.6	0.44
*35-3R	9.525	5.08	4.77	3.58	32.70	33.50	9.00	1.30	10.13	23.7	28.6	1.05
40-3R	12.700	7.95	7.85	3.96	45.40	46.60	12.00	1.50	14.38	42.3	50.0	1.90
50-3R	15.875	10.16	9.40	5.08	57.00	58.50	15.09	2.03	18.11	66.6	77.8	3.09
60-3R	19.050	11.91	12.57	5.94	71.50	73.30	18.00	2.42	22.78	95.4	111.1	4.54
80-3R	25.400	15.88	15.75	7.92	91.70	93.60	24.00	3.25	29.29	170.1	198.4	7.89
100-3R	31.750	19.05	18.90	9.53	112.20	116.30	30.00	4.00	35.76	265.5	309.6	11.77
120-3R	38.100	22.23	25.22	11.10	141.40	145.20	35.70	4.80	45.44	381.0	437.2	17.53
140-3R	44.450	25.40	25.22	12.70	152.20	156.80	41.00	5.60	48.87	517.2	593.3	22.20
160-3R	50.800	28.58	31.55	14.27	181.80	186.60	47.80	6.40	58.55	680.4	780.6	30.02
180-3R	57.150	35.71	35.48	17.46	204.40	210.20	53.60	7.20	65.84	840.7	983.6	38.22
200-3R	63.500	39.68	37.85	19.85	223.50	230.40	60.00	8.00	71.55	1061.4	1217.8	49.03
240-3R	76.200	47.63	47.35	23.81	271.30	278.60	72.39	9.50	87.83	1530.9	1756.5	71.60

* Bush chain: **A** in the table indicates the external diameter of the bush

Standard boxed lengths are 5 metres or 10 feet.
Each box contains one CL. Special lengths available.

Every effort has been taken to ensure that the data listed in this catalogue is correct. Challenge accepts no liability for any inaccuracies or damage caused.

All dimensions in millimetres unless otherwise stated.

CHALLENGE®

Roller Chain

ANSI Heavy Duty Roller Chain

ANSI B29.1, ISO R606, DIN 8188

ANSI Heavy Duty Roller Chain

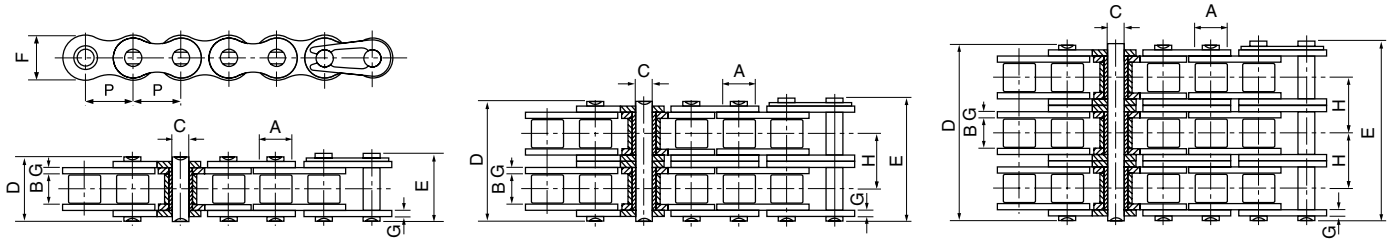

ANSI Chain number	Pitch P	Roller diameter A	Width between inner plates B	Pin diameter C	Pin length D	Pin length E	Inner plate height F	Plate thick-ness G	Trans-verse pitch H	Minimum tensile strength kN	Average tensile strength kN	Weight kg/m
SIMPLEX												
40H-1R	12.700	7.95	7.85	3.96	18.80	19.90	12.00	2.03	-	14.10	19.10	0.82
50H-1R	15.875	10.16	9.40	5.08	22.10	23.40	15.09	2.42	-	22.20	30.20	1.25
60H-1R	19.050	11.91	12.57	5.94	29.20	31.00	18.00	3.25	-	31.80	42.70	1.87
80H-1R	25.400	15.88	15.75	7.92	36.20	37.70	24.00	4.00	-	56.70	71.40	3.10
100H-1R	31.750	19.05	18.90	9.53	43.60	46.90	30.00	4.80	-	88.50	112.40	4.52
120H-1R	38.100	22.23	25.22	11.10	53.50	57.50	35.70	5.60	-	127.00	160.90	6.60
140H-1R	44.450	25.40	25.22	12.70	57.60	62.20	41.00	6.40	-	172.40	217.30	8.30
160H-1R	50.800	28.58	31.55	14.27	68.20	73.00	47.80	7.20	-	226.80	285.80	10.30
200H-1R	63.500	39.68	37.85	19.85	86.60	93.50	60.00	9.50	-	353.80	444.50	19.16
DUPLEX												
60H-2R	19.050	11.91	12.57	5.94	55.30	57.10	18.00	3.25	26.11	63.60	84.50	3.71
80H-2R	25.400	15.88	15.75	7.92	68.80	70.30	24.00	4.00	32.59	113.40	145.30	6.15
100H-2R	31.750	19.05	18.90	9.53	82.70	86.00	30.00	4.80	39.09	177.00	225.90	9.03
120H-2R	38.100	22.23	25.22	11.10	102.40	106.40	35.70	5.60	48.87	254.00	322.70	13.13
140H-2R	44.450	25.40	25.22	12.70	109.80	114.40	41.00	6.40	52.20	344.80	437.70	16.60
160H-2R	50.800	28.58	31.55	14.27	130.10	134.90	47.80	7.20	61.90	453.60	571.60	20.20
200H-2R	63.500	39.68	37.85	19.85	164.90	171.80	60.00	9.50	78.31	707.60	894.90	38.11
TRIPLEX												
60H-3R	19.050	11.91	12.57	5.94	81.40	83.20	18.00	3.25	26.11	95.40	113.90	5.54
80H-3R	25.400	15.88	15.75	7.92	101.40	102.90	24.00	4.00	32.59	170.10	203.50	9.42
100H-3R	31.750	19.05	18.90	9.53	121.80	125.10	30.00	4.80	39.09	265.50	314.80	12.96
120H-3R	38.100	22.23	25.22	11.10	151.20	155.20	35.70	5.60	48.87	381.00	444.70	19.64
140H-3R	44.450	25.40	25.22	12.70	162.00	166.60	41.00	6.40	52.20	517.20	598.40	24.90
160H-3R	50.800	28.58	31.55	14.27	192.00	196.80	47.80	7.20	61.90	680.40	787.30	30.10
200H-3R	63.500	39.68	37.85	19.85	243.20	250.10	60.00	9.50	78.31	1061.40	1228.20	57.06

Standard boxed lengths are 5 metres or 10 feet.
Each box contains one CL. Special lengths available.

All dimensions in millimetres unless otherwise stated. Every effort has been taken to ensure that the data listed in this catalogue is correct. Challenge accepts no liability for any inaccuracies or damage caused.

Roller Chain

ANSI Cottered Series Roller Chain

ANSI B29.1, ISO R606, DIN 8188

ANSI Cottered A Series Roller Chain

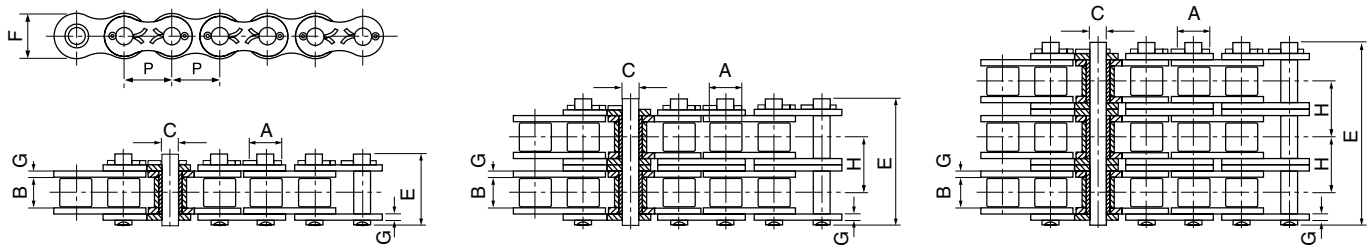

ANSI Chain number	Pitch P	Roller diameter A	Width between inner plates B	Pin diameter C	Pin length E	Inner plate height F	Plate thick-ness G	Trans-verse pitch H	Minimum tensile strength kN	Average tensile strength kN	Weight kg/m
SIMPLEX											
50-1C	15.875	10.16	9.40	5.08	23.00	15.09	2.03	-	22.20	29.40	1.02
60-1C	19.050	11.91	12.57	5.94	28.30	18.00	2.42	-	31.80	41.50	1.50
80-1C	25.400	15.88	15.75	7.92	36.50	24.00	3.25	-	56.70	69.40	2.60
100-1C	31.750	19.05	18.90	9.53	44.70	30.00	4.00	-	88.50	109.20	3.91
120-1C	38.100	22.23	25.22	11.10	54.30	35.70	4.80	-	127.00	156.30	5.62
140-1C	44.450	25.40	25.22	12.70	59.00	41.00	5.60	-	172.40	212.00	7.50
160-1C	50.800	28.58	31.55	14.27	69.60	47.80	6.40	-	226.80	278.90	10.10
180-1C	57.150	35.71	35.48	17.46	78.60	53.60	7.20	-	280.20	341.80	13.45
200-1C	63.500	39.68	37.85	19.85	87.20	60.00	8.00	-	353.80	431.60	16.15
240-1C	76.200	47.63	47.35	23.81	103.00	72.39	9.50	-	510.30	622.50	23.20
DUPLEX											
50-2C	15.875	10.16	9.40	5.08	41.20	15.09	2.03	18.11	44.40	58.10	2.00
60-2C	19.050	11.91	12.57	5.94	51.10	18.00	2.42	22.78	63.60	82.10	2.92
80-2C	25.400	15.88	15.75	7.92	65.80	24.00	3.25	29.29	113.40	141.80	5.15
100-2C	31.750	19.05	18.90	9.53	80.50	30.00	4.00	35.76	177.00	219.40	7.80
120-2C	38.100	22.23	25.22	11.10	99.70	35.70	4.80	45.44	254.00	314.90	11.70
140-2C	44.450	25.40	25.22	12.70	107.90	41.00	5.60	48.87	344.80	427.50	15.14
160-2C	50.800	28.58	31.55	14.27	128.10	47.80	6.40	58.55	453.60	562.40	20.14
180-2C	57.150	35.71	35.48	17.46	144.40	53.60	7.20	65.84	560.50	695.00	29.22
200-2C	63.500	39.68	37.85	19.85	158.80	60.00	8.00	71.55	707.60	877.40	32.24
240-2C	76.200	47.63	47.35	23.81	190.80	72.39	9.50	87.83	1020.60	1255.30	45.23
TRIPLEX											
50-3C	15.875	10.16	9.40	5.08	59.30	15.09	2.03	18.11	66.60	77.80	3.09
60-3C	19.050	11.91	12.57	5.94	73.90	18.00	2.42	22.78	95.40	111.10	4.54
80-3C	25.400	15.88	15.75	7.92	93.60	24.00	3.25	29.29	170.10	198.40	7.89
100-3C	31.750	19.05	18.90	9.53	116.30	30.00	4.00	35.76	265.50	309.60	11.77
120-3C	38.100	22.23	25.22	11.10	145.20	35.70	4.80	45.44	381.00	437.20	17.53
140-3C	44.450	25.40	25.22	12.70	156.80	41.00	5.60	48.87	517.20	593.30	22.20
160-3C	50.800	28.58	31.55	14.27	186.60	47.80	6.40	58.55	680.40	780.60	30.02
180-3C	57.150	35.71	35.48	17.46	210.20	53.60	7.20	65.84	840.70	983.60	38.22
200-3C	63.500	39.68	37.85	19.85	230.40	60.00	8.00	71.55	1061.40	1217.80	49.03
240-3C	76.200	47.63	47.35	23.81	278.60	72.39	9.50	87.83	1530.90	1756.50	71.60

Standard boxed lengths are 5 metres or 10 feet.
Each box contains one CL. Special lengths available.

Every effort has been taken to ensure that the data listed in this catalogue is correct. Challenge accepts no liability for any inaccuracies or damage caused.

All dimensions in millimetres unless otherwise stated.

CHALLENGE®

Roller Chain

ANSI Cottered Heavy Duty Roller Chain

ANSI B29.1, ISO R606, DIN 8188

ANSI Cottered Heavy Duty Roller Chain

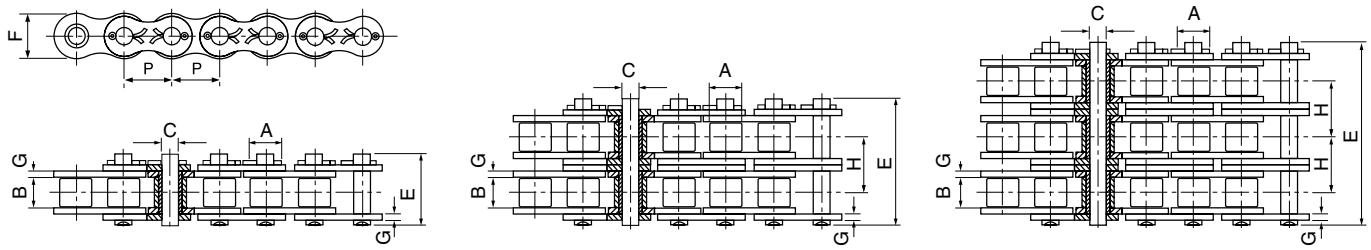

ANSI Chain number	Pitch P	Roller diameter A	Width between inner plates B	Pin diameter C	Pin length E	Inner plate height F	Plate thick-ness G	Trans-verse pitch H	Minimum tensile strength kN	Average tensile strength kN	Weight kg/m
SIMPLEX											
50H-1C	15.875	10.16	9.40	5.08	24.40	15.09	2.42	-	22.20	30.20	1.25
60H-1C	19.050	11.91	12.57	5.94	31.60	18.00	3.25	-	31.80	42.70	1.87
80H-1C	25.400	15.88	15.75	7.92	39.40	24.00	4.00	-	56.70	71.40	3.10
100H-1C	31.750	19.05	18.90	9.53	46.90	30.00	4.80	-	88.50	112.40	4.52
120H-1C	38.100	22.23	25.22	11.10	57.50	35.70	5.60	-	127.00	160.90	6.60
140H-1C	44.450	25.40	25.22	12.70	62.20	41.00	6.40	-	172.40	217.30	8.30
160H-1C	50.800	28.58	31.55	14.27	73.00	47.80	7.20	-	226.80	285.80	10.30
200H-1C	63.500	39.68	37.85	19.85	93.50	60.00	9.50	-	353.80	444.50	19.16
DUPLEX											
60H-2C	19.050	11.91	12.57	5.94	57.70	18.00	3.25	26.11	63.60	84.50	3.71
80H-2C	25.400	15.88	15.75	7.92	72.00	24.00	4.00	32.59	113.40	145.30	6.15
100H-2C	31.750	19.05	18.90	9.53	86.00	30.00	4.80	39.09	177.00	225.90	9.03
120H-2C	38.100	22.23	25.22	11.10	106.40	35.70	5.60	48.87	254.00	322.70	13.13
140H-2C	44.450	25.40	25.22	12.70	114.40	41.00	6.40	52.20	344.80	437.70	16.60
160H-2C	50.800	28.58	31.55	14.27	134.90	47.80	7.20	61.90	453.60	571.60	20.20
200H-2C	63.500	39.68	37.85	19.85	171.80	60.00	9.50	78.31	707.60	894.90	31.11
TRIPLEX											
60H-3C	19.050	11.91	12.57	5.94	83.80	18.00	3.25	26.11	95.40	113.90	5.54
80H-3C	25.400	15.88	15.75	7.92	104.60	24.00	4.00	32.59	170.10	203.50	9.42
100H-3C	31.750	19.05	18.90	9.53	125.10	30.00	4.80	39.09	265.50	314.80	12.96
120H-3C	38.100	22.23	25.22	11.10	155.20	35.70	5.60	48.87	381.00	444.70	19.64
140H-3C	44.450	25.40	25.22	12.70	166.60	41.00	6.40	52.20	517.20	598.40	24.90
160H-3C	50.800	28.58	31.55	14.27	196.80	47.80	7.20	61.90	680.40	787.30	30.10
200H-3C	63.500	39.68	37.85	19.85	250.10	60.00	9.50	78.31	1061.40	1228.20	57.06

Standard boxed lengths are 5 metres or 10 feet.
Each box contains one CL. Special lengths available.

Chain Breakers

Model	Range	
	From inch	To inch
CB-101 (Small)	3/8”	3/4”
CB-102 (Large)	3/4”	1.1/4”

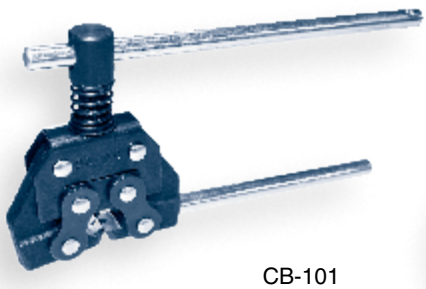

CB-101

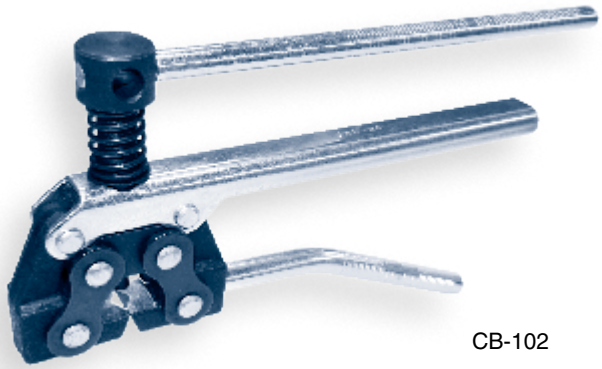

CB-102

All dimensions in millimetres unless otherwise stated.

Every effort has been taken to ensure that the data listed in this catalogue is correct. Challenge accepts no liability for any inaccuracies or damage caused.

Roller Chain

ANSI Straight Side Plate Roller Chain

ANSI B29.1, ISO R606, DIN 8188

ANSI Straight Side Plate Roller Chain

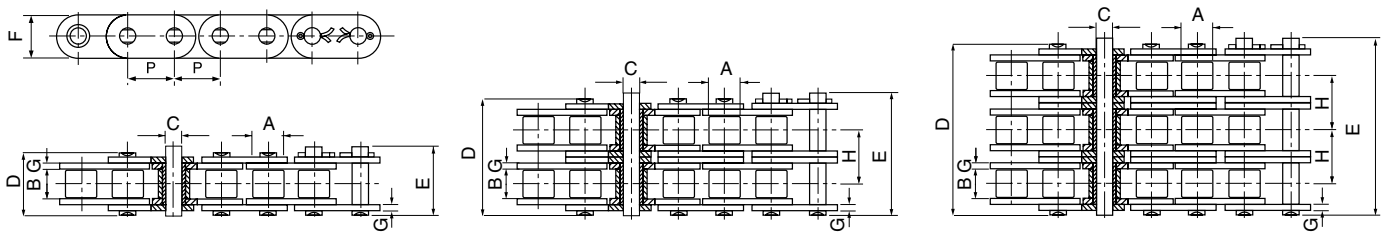

ANSI Chain number	Pitch P	Roller diameter A	Width between inner plates B	Pin diameter C	Pin length D	Pin length E	Inner plate height F	Plate thick-ness G	Trans-verse pitch H	Minimum tensile strength kN	Average tensile strength kN	Weight kg/m
SIMPLEX												
C40-1R	12.700	7.95	7.85	3.96	16.60	18.80	12.00	1.50	-	14.10	17.50	0.73
C50-1R	15.875	10.16	9.40	5.08	20.70	23.30	15.09	2.03	-	22.20	29.40	1.23
C60-1R	19.050	11.91	12.57	5.94	25.90	28.30	18.0/18.2	2.42	-	31.80	41.50	1.81/1.83
C80-1R	25.400	15.88	15.75	7.92	32.70	36.50	24.00	3.25	-	56.70	69.40	3.09
C100-1R	31.750	19.05	18.90	9.53	40.40	44.70	30.00	4.00	-	88.50	109.20	4.56
C120-1R	38.100	22.23	25.22	11.10	50.30	54.30	35.70	4.80	-	127.00	156.30	6.86
C140-1R	44.450	25.40	25.22	12.70	54.40	59.00	41.00	5.60	-	172.40	212.00	8.49
C160-1R	50.800	28.58	31.55	14.27	64.80	69.60	47.80	6.40	-	226.80	278.90	11.50
DUPLEX												
C40-2R	12.700	7.95	7.85	3.96	31.00	33.20	12.00	1.50	14.38	28.20	35.90	1.43
C50-2R	15.875	10.16	9.40	5.08	38.90	41.40	15.09	2.03	18.11	44.40	58.10	2.42
C60-2R	19.050	11.91	12.57	5.94	48.80	51.10	18.0/18.2	2.42	22.78	63.60	82.10	3.58/3.62
C80-2R	25.400	15.88	15.75	7.92	62.70	65.80	24.00	3.25	29.29	113.40	141.80	6.12
C100-2R	31.750	19.05	18.90	9.53	76.40	80.50	30.00	4.00	35.76	177.00	219.40	9.08
C120-2R	38.100	22.23	25.22	11.10	95.80	99.70	35.70	4.80	45.44	254.00	314.90	13.60
C140-2R	44.450	25.40	25.22	12.70	103.30	107.90	41.00	5.60	48.87	344.80	427.50	16.86
C160-2R	50.800	28.58	31.55	14.27	123.30	128.10	47.80	6.40	58.55	453.60	562.40	22.90
TRIPLEX												
C40-3R	12.700	7.95	7.85	3.96	45.40	47.60	12.00	1.50	14.38	42.30	50.00	2.14
C50-3R	15.875	10.16	9.40	5.08	57.00	59.50	15.09	2.03	18.11	66.60	77.80	3.62
C60-3R	19.050	11.91	12.57	5.94	71.50	73.90	18.0/18.2	2.42	22.78	95.40	111.10	5.36/5.41
C80-3R	25.400	15.88	15.75	7.92	91.70	95.10	24.00	3.25	29.29	170.10	198.40	9.10
C100-3R	31.750	19.05	18.90	9.53	112.20	116.30	30.00	4.00	35.76	265.50	309.60	13.60
C120-3R	38.100	22.23	25.22	11.10	141.40	145.20	35.70	4.80	45.44	381.00	437.20	20.43
C140-3R	44.450	25.40	25.22	12.70	152.20	156.80	41.00	5.60	48.87	517.20	593.30	25.23
C160-3R	50.800	28.58	31.55	14.27	181.80	186.60	47.80	6.40	58.55	680.40	780.60	34.19

Standard boxed lengths are 5 metres or 10 feet.
Each box contains one CL. Special lengths available.

Chain Pullers

Model	Range From inch	Range To inch
CB-105 (Small)	1/4”	3/4”
CB-106 (Large)	3/4”	1.1/4”

CB-105

CB-106

Every effort has been taken to ensure that the data listed in this catalogue is correct. Challenge accepts no liability for any inaccuracies or damage caused.

All dimensions in millimetres unless otherwise stated.

Roller Chain

BS Straight Side Plate Roller Chain

ANSI B29.1, ISO R606, DIN 8187

BS Straight Side Plate Roller Chain

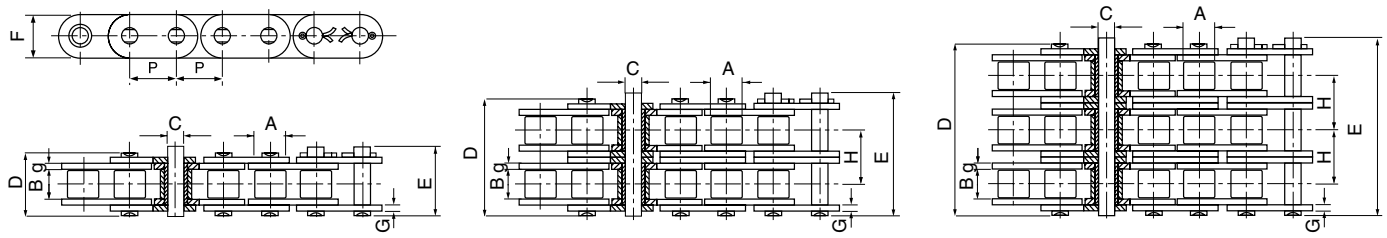

ISO Chain number	Pitch P	Roller diameter A	Width between inner plates B	Pin diameter C	Pin length D	Pin length E	Inner plate height F	Plate thick-ness g/G	Trans-verse pitch H	Minimum tensile strength kN	Average tensile strength kN	Weight kg/m
SIMPLEX												
08B-1 GL	12.700	8.51	7.75	4.45	16.70	18.20	11.80	1.60	-	18.00	19.50	0.80
10B-1 GL	15.875	10.16	9.65	5.08	19.50	20.90	14.70	1.70	-	22.40	27.90	1.06
12B-1 GL	19.050	12.07	11.68	5.72	22.50	25.20	16.00	1.85	-	29.00	32.20	1.32
16B-1 GL	25.400	15.88	17.02	8.28	36.10	39.10	21.0/24.0	4.15/3.1	-	60.00	72.80	3.08/3.49
*20B-1 GL	31.750	19.05	19.56	10.19	41.30	45.00	26.40	4.5/3.5	-	95.00	106.70	4.16
*24B-1 GL	38.100	25.40	25.40	14.63	53.40	57.80	33.20	6.0/4.8	-	160.00	178.00	7.47
*28B-1 GL	44.450	27.94	30.99	15.90	65.10	69.50	36.70	7.5/6.0	-	200.00	222.00	9.90
*32B-1 GL	50.800	29.21	30.99	17.81	66.00	71.00	42.00	7.0/6.0	-	250.00	277.50	10.45
DUPLEX												
08B-2 GL	12.700	8.51	7.75	4.45	31.20	32.20	11.80	1.60	13.92	32.00	38.70	1.45
10B-2 GL	15.875	10.16	9.65	5.08	36.10	37.50	14.70	1.70	16.59	44.50	57.80	2.00
12B-2 GL	19.050	12.07	11.68	5.72	42.00	44.70	16.00	1.85	19.46	57.80	66.10	2.62
16B-2 GL	25.400	15.88	17.02	8.28	68.00	71.00	21.0/24.0	4.15/3.1	31.88	106.00	133.00	6.10/6.92
*20B-2 GL	31.750	19.05	19.56	10.19	77.80	81.50	26.40	4.5/3.5	36.45	170.00	211.20	8.23
*24B-2 GL	38.100	25.40	25.40	14.63	101.70	106.20	33.20	6.0/4.8	48.36	280.00	319.20	14.77
*28B-2 GL	44.450	27.94	30.99	15.90	124.60	129.10	36.70	7.5/6.0	59.56	360.00	406.80	19.82
*32B-2 GL	50.800	29.21	30.99	17.81	124.60	129.60	42.00	7.0/6.0	58.55	450.00	508.50	20.94
TRIPLEX												
08B-3 GL	12.700	8.51	7.75	4.45	45.10	46.10	11.80	1.60	13.92	47.50	57.80	2.10
10B-3 GL	15.875	10.16	9.65	5.08	52.70	54.10	14.70	1.70	16.59	66.70	84.50	2.87
12B-3 GL	19.050	12.07	11.68	5.72	61.50	64.20	16.00	1.85	19.46	86.70	101.80	3.89
16B-3 GL	25.400	15.88	17.02	8.28	99.80	102.90	21.0/24.0	4.15/3.1	31.88	160.00	203.70	9.12/10.34
*20B-3 GL	31.750	19.05	19.56	10.19	114.20	117.90	26.40	4.5/3.5	36.45	250.00	290.00	11.34
*24B-3 GL	38.100	25.40	25.40	14.63	150.10	154.60	33.20	6.0/4.8	48.36	425.00	493.00	22.10
*28B-3 GL	44.450	27.94	30.99	15.90	184.20	188.70	36.70	7.5/6.0	59.56	530.00	609.50	29.64
*32B-3 GL	50.800	29.21	30.99	17.81	183.20	188.20	42.00	7.0/6.0	58.55	670.00	770.50	31.27

* X-Series chains with spin riveted pins also available in these sizes.

Standard boxed lengths are 5 metres or 10 feet.
Each box contains one CL. Special lengths available.

All dimensions in millimetres unless otherwise stated.

Every effort has been taken to ensure that the data listed in this catalogue is correct. Challenge accepts no liability for any inaccuracies or damage caused.

Roller Chain

Special Transmission Roller Chain

Special Transmission Roller Chain

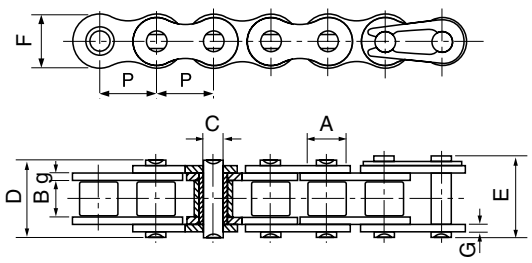

ISO Chain number	Pitch P	Roller diameter A	Width between inner plates B	Pin diameter C	Pin length D	Pin length E	Inner plate height F	Plate thick-ness g/G	Minimum tensile strength kN	Average tensile strength kN	Weight kg/m
04BH	6.00	4.00	2.80	1.85	8.40	9.40	5.00	0.90	5.00	5.30	0.14
081	12.70	7.75	3.30	3.66	9.30	12.30	9.90	1.00	8.00	9.40	0.28
084	12.70	7.75	4.88	4.09	14.60	17.60	11.50	1.80	15.60	15.70	0.51
415	12.70	7.77	4.76	3.60	11.00	12.40	9.70	1.00	6.86	7.60	0.32
415H	12.70	7.77	4.76	3.96	13.10	14.50	12.00	1.50	14.40	16.10	0.55
415B/083	12.70	7.75	4.88	4.09	12.90	14.40	10.30	1.30	12.00	14.20	0.44
415BF1	12.70	7.75	4.88	4.09	11.50	13.00	10.30	1.00	9.00	10.60	0.38
423	12.70	8.51	6.40	4.45	15.60	17.10	12.40	1.70	19.60	21.90	0.71
478	12.70	7.80	4.80	4.00	11.60	13.65	10.46	1.25	9.80	12.80	0.39
08BF	12.70	8.51	5.55	4.45	14.60	16.10	11.80	1.60	17.80	19.20	0.66
12BH	19.05	12.07	11.68	5.94	25.20	26.80	16.00	2.42	40.00	44.40	1.45
12BHF1	19.05	12.07	11.68	6.10	25.00	27.20	16.50	2.50	44.00	48.80	1.46
16BF1	25.40	15.88	12.20	8.28	31.40	32.70	21.00	4.15/3.1	60.00	71.40	2.60
16BF2	25.40	15.88	17.02	8.28	38.60	39.80	21.00	4.15	60.00	71.40	3.08
16BF5	25.40	15.88	12.70	8.28	30.80	32.10	20.00	3.5/3.0	50.00	57.50	2.37
16BH	25.40	15.88	17.02	8.90	35.70	38.90	24.10	4.0/3.1	80.00	94.20	3.11
24BH	38.10	25.40	25.40	14.63	58.60	63.40	36.20	7.5/6.0	225.00	250.30	9.00

Extended Pin Chain

ISO Chain No.	ANSI Chain No.	P	B	C	S	D	E
	35	9.525	4.77	3.58	9.50	20.80	21.60
	40	12.700	7.85	3.96	9.50	25.10	26.20
	50	15.875	9.40	5.08	11.90	31.30	33.10
	60	19.050	12.57	5.94	14.30	38.60	40.60
	80	25.400	15.75	7.92	19.10	50.30	53.30
	100	31.750	18.90	9.53	23.80	61.80	66.10
	120	38.100	25.22	11.10	28.60	76.40	80.40
	140	44.450	25.22	12.70	33.30	84.80	89.40
	160	50.800	31.55	14.27	38.10	99.60	104.40
08B		12.700	7.75	4.45	9.50	25.10	26.60
10B		15.875	9.65	5.08	11.90	30.10	31.50
12B		19.050	11.68	5.72	14.30	35.40	37.10
16B		25.400	17.02	8.28	19.10	53.00	54.30

D-1 & D-3 Pins

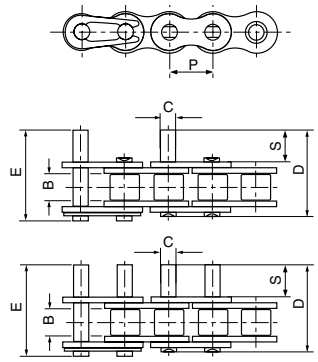

Standard boxed lengths are 5 metres or 10 feet.
Each box contains one CL. Special lengths available.

Every effort has been taken to ensure that the data listed in this catalogue is correct. Challenge accepts no liability for any inaccuracies or damage caused. All dimensions in millimetres unless otherwise stated.

Roller Chain

Hollow Pin Chain

Hollow Pin Chain

Type A Bushed

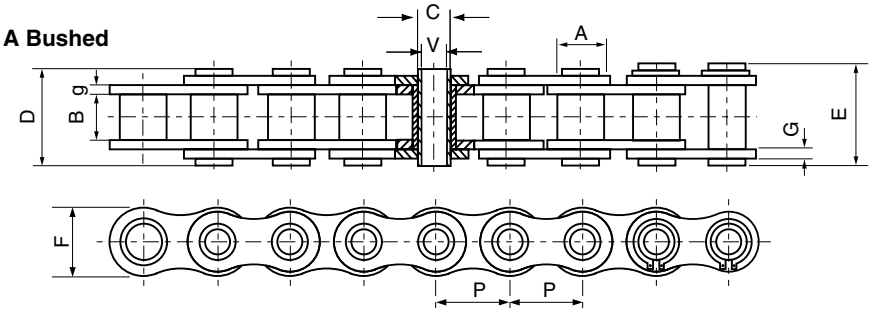

Type C Roller

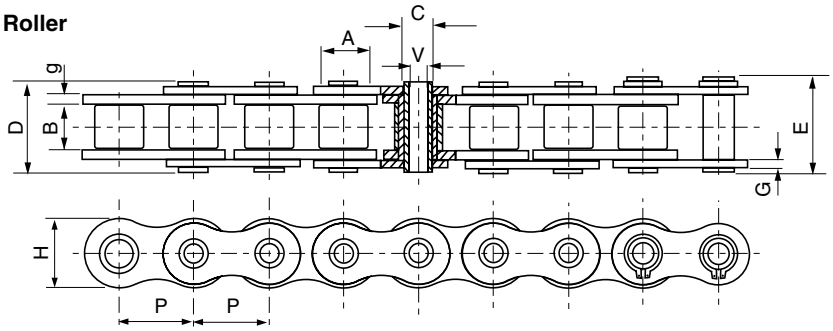

Chain number	Pitch P	Roller/Bush diameter A	Width between inner plates B	Pin diameter C	Pin diameter V	Pin length D	Pin length E	Inner plate height F	Plate thick-ness g/G	Minimum tensile strength kN	Average tensile strength kN	Weight kg/m	Type form
08BHP(4.0)	12.700	8.51	7.75	6.55	4.00	16.4	17.6	11.80	1.6/1.3	11.10	12.1	0.60	A
08BHP(4.5)	12.700	8.51	7.75	6.55	4.50	16.4	17.6	11.80	1.6/1.3	11.10	12.1	0.56	A
10BHP	15.875	10.16	9.65	5.94	4.04	19.3	20.6	14.70	1.70	17.00	20.8	0.86	C
12BHP	19.050	12.07	11.68	6.50	4.00	21.6	22.8	15.90	1.85	23.60	25.9	1.09	C
40HP	12.700	7.95	7.85	5.63	4.00	16.5	17.6	12.00	1.50	11.00	12.2	0.54	A
50HP	15.875	10.16	9.40	7.03	5.13	20.7	21.9	15.09	2.03	20.00	22.6	0.91	A
60HP	19.050	11.91	12.70	8.31	6.00	25.8	26.8	18.00	2.42	24.00	26.9	1.29	A
60HPF1	19.050	11.91	12.70	8.31	5.01	25.5	26.8	18.00	2.42	28.00	30.9	1.37	A
60HB	19.050	11.91	12.70	7.00	5.01	25.5	26.6	18.00	2.42	20.00	22.4	1.35	C
80HP	25.400	15.88	15.75	11.40	8.05	32.5	33.8	24.00	3.25	50.00	58.3	2.26	A

Standard boxed lengths are 5 metres or 10 feet.
Each box contains one CL. Special lengths available.

All dimensions in millimetres unless otherwise stated.

Every effort has been taken to ensure that the data listed in this catalogue is correct. Challenge accepts no liability for any inaccuracies or damage caused.

Roller Chain

Special Chain - **Challenge produce many special chains. The following pages are examples of a few. Contact Challenge for a quote on any special chains or attachments that aren't shown in our catalogue.**

Special Chain with "U" Attachments

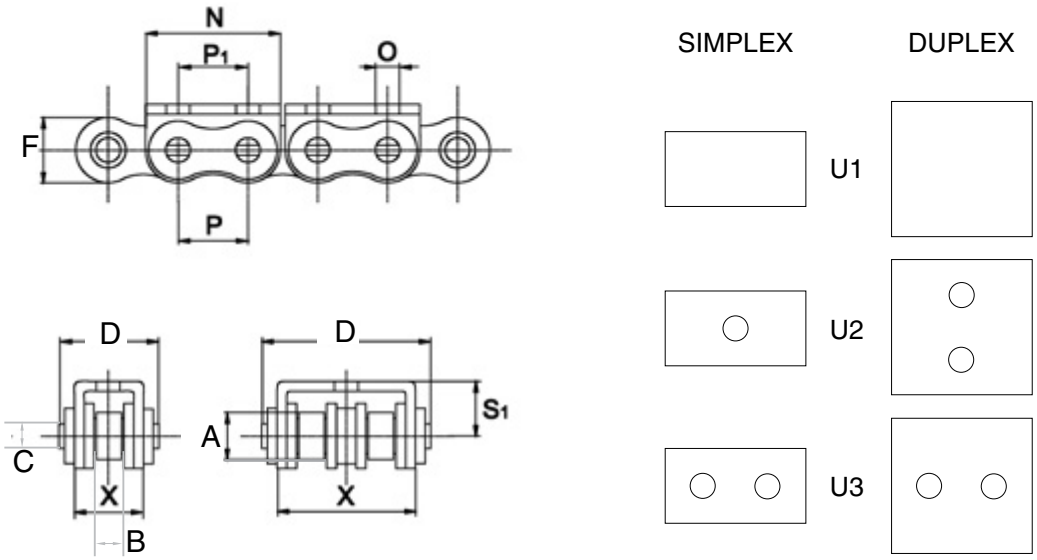

Chain number	Chain Pitch	Roller diameter	Width between inner plates	Pin diameter	Side Plate Height	Pin length	Hole diameter	Hole pitch				Tensile strength
	P	A	B	C	F	D	O	P_1	X	N	S_1	kN
08B-1/U1	12.700	8.51	7.75	4.45	11.8	20.4	-	-	14.4	24.0	8.5	14.60
08B-1/U2	12.700	8.51	7.75	4.45	11.8	20.4	5	-	14.4	24.0	8.5	14.60
08B-1/U3	12.700	8.51	7.75	4.45	11.8	20.4	5	12.7	14.4	24.0	8.5	14.60
08B-2/U1	12.700	8.51	7.75	4.45	11.8	34.4	-	-	28.4	24.0	8.1	28.60
08B-2/U2	12.700	8.51	7.75	4.45	11.8	34.4	4	14.0	28.4	24.0	8.1	28.60
08B-2/U3	12.700	8.51	7.75	4.45	11.8	34.4	4	12.7	28.4	24.0	8.1	28.60
10B-1/U1	15.875	10.16	9.65	5.08	14.7	22.8	-	-	16.4	30.0	10.6	18.20
10B-1/U2	15.875	10.16	9.65	5.08	14.7	22.8	5	-	16.4	30.0	10.6	18.20
10B-1/U3	15.875	10.16	9.65	5.08	14.7	22.8	5	15.8	16.4	30.0	10.6	18.20
10B-2/U1	15.875	10.16	9.65	5.08	14.7	39.0	-	-	33.3	30.0	10.6	36.30
10B-2/U2	15.875	10.16	9.65	5.08	14.7	39.0	5	16.6	33.3	30.0	10.6	36.30
10B-2/U3	15.875	10.16	9.65	5.08	14.7	39.0	5	15.8	33.3	30.0	10.6	36.30
12B-1/U1	19.050	12.07	11.68	5.72	16.0	26.5	-	-	19.4	35.0	13.0	23.60
12B-1/U2	19.050	12.07	11.68	5.72	16.0	26.5	5	-	19.4	35.0	13.0	23.60
12B-1/U3	19.050	12.07	11.68	5.72	16.0	26.5	5	19.0	19.4	35.0	13.0	23.60
12B-2/U1	19.050	12.07	11.68	5.72	16.0	46.5	-	-	39.4	35.0	12.0	46.60
12B-2/U2	19.050	12.07	11.68	5.72	16.0	46.5	5	19.5	39.4	35.0	12.0	46.60
12B-2/U3	19.050	12.07	11.68	5.72	16.0	46.5	5	19.0	39.4	35.0	12.0	46.60
16B-1/U1	25.400	15.88	17.02	8.28	21.0	39.2	-	-	29.4	49.0	15.4	58.00
16B-1/U2	25.400	15.88	17.02	8.28	21.0	39.2	5	-	29.4	49.0	15.4	58.00
16B-1/U3	25.400	15.88	17.02	8.28	21.0	39.2	5	25.4	29.4	49.0	15.4	58.00
16B-2/U1	25.400	15.88	17.02	8.28	21.0	73.0	-	-	29.4	49.0	15.4	98.00
16B-2/U2	25.400	15.88	17.02	8.28	21.0	73.0	5	-	29.4	49.0	15.4	98.00
16B-2/U3	25.400	15.88	17.02	8.28	21.0	73.0	5	25.4	29.4	49.0	15.4	98.00

Standard boxed lengths are 5 metres or 10 feet.
Each box contains one CL. Special lengths available.

Every effort has been taken to ensure that the data listed in this catalogue is correct. Challenge accepts no liability for any inaccuracies or damage caused. All dimensions in millimetres unless otherwise stated.

Roller Chain

Special Chain with “U” Attachments and Rubber Elements

Special Chain with “U” Attachments and Rubber Elements

Type UG1

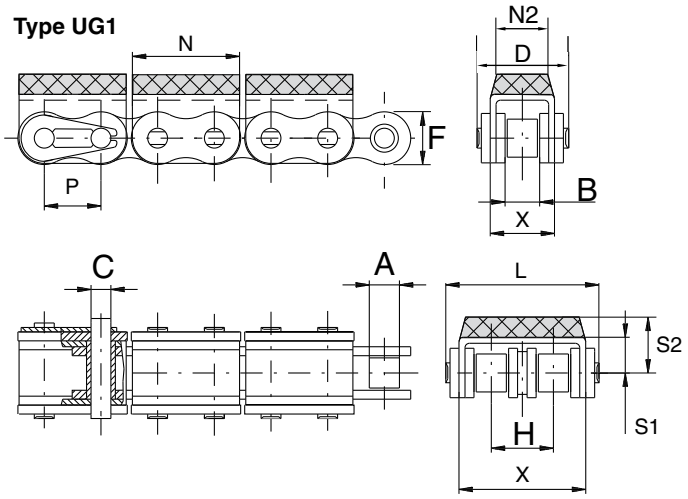

Type UG2

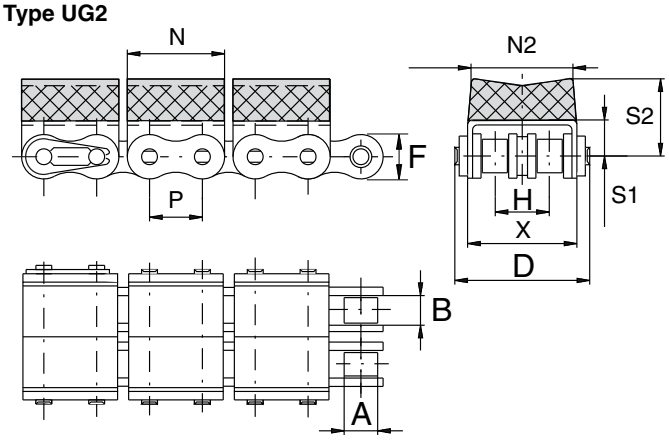

Special Chain with “U” Attachments and Rubber Elements - Model UGS

Type UGS 16B-1

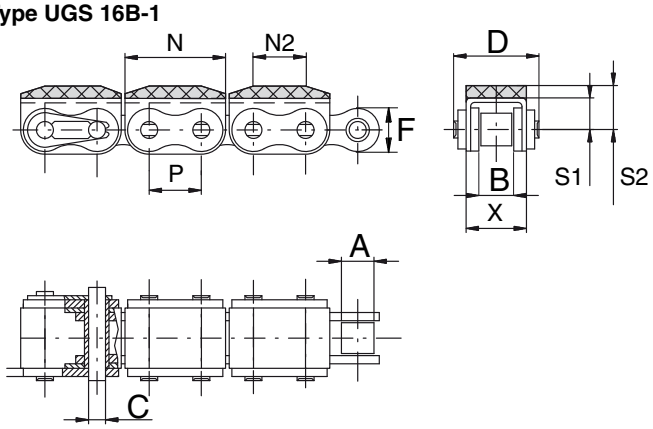

Type UGS 16B-2

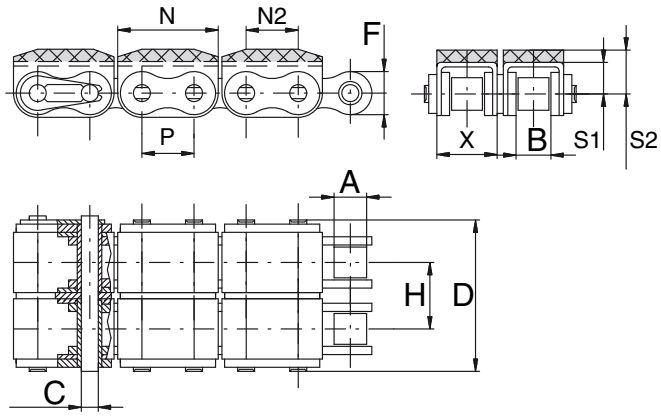

Chain Number	Chain Pitch	Roller diameter	Width between inner plates	Pin diameter	Side Plate Height	Pin length	“U” profile	“U” profile	“U” profile	“U” Profile height	“U” Profile height	Transverse pitch	Min. Tensile strength
	P	A	B	C	F	D	X	N	N2	S1	S2	H	kN
08B-1/UG1	12.700	8.51	7.75	4.45	11.80	20.40	14.4	24	10.0	8.50	13.00	-	14.60
08B-2/UG1	12.700	8.51	7.75	4.45	11.80	34.40	28.4	24	20.0	8.10	12.50	13.92	28.60
10B-1/UG1	15.875	10.16	9.65	5.08	14.70	22.80	16.4	30	13.5	10.60	17.00	-	18.20
10B-2/UG1	15.875	10.16	9.65	5.08	14.70	39.00	33.3	30	30.0	10.60	15.50	16.59	36.30
12B-1/UG1	19.050	12.07	11.68	5.72	16.00	26.50	19.4	35	12.0	13.00	21.00	-	23.60
12B-2/UG1	19.050	12.07	11.68	5.72	16.00	46.50	39.4	35	36.0	12.00	20.00	19.46	46.60
16B-1/UG1	25.400	15.88	17.02	8.28	21.00	39.20	29.4	49	22.0	15.40	21.40	-	58.00
16B-2/UG1	25.400	15.88	17.02	8.28	21.00	73.00	29.4	49	22.0	15.40	21.40	31.88	98.00
12B-1/UG2	19.050	12.07	11.68	5.72	16.00	26.50	19.4	35	13.5	13.00	21.00	-	23.60
12B-2/UG2	19.050	12.07	11.68	5.72	16.00	46.50	39.4	35	36.0	12.00	28.00	19.46	46.60
16B-1/UGS	25.400	15.88	17.02	8.28	21.00	39.20	29.4	49	25.4	15.40	21.40	-	58.00
16B-2/UGS	25.400	17.02	15.88	8.28	21.00	73.00	29.4	49	25.4	15.40	21.40	31.88	98.00

Standard boxed lengths are 5 metres or 10 feet.
Each box contains one CL. Special lengths available.

All dimensions in millimetres unless otherwise stated.

Every effort has been taken to ensure that the data listed in this catalogue is correct. Challenge accepts no liability for any inaccuracies or damage caused.

Roller Chain

Special Roller Chain

Special Roller Chain

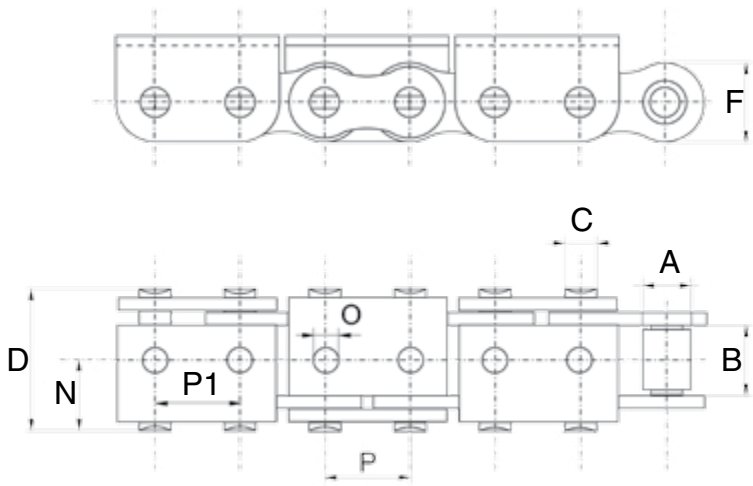

Chain number	Pitch	Width between inner plates	Roller diameter	Pin diameter	Pin length	Side plate height	Hole diameter	Hole pitch		Tensile strength
	P	B	A	C	D	F	O	P1	N	kN
16B-1/P	25.4	17.02	15.88	8.28	36.1	21.0	6.5	25.4	15.9	58

Special Chain with Driver

Note: Various configurations of this chain are available.

Please provide dimensions when enquiring.

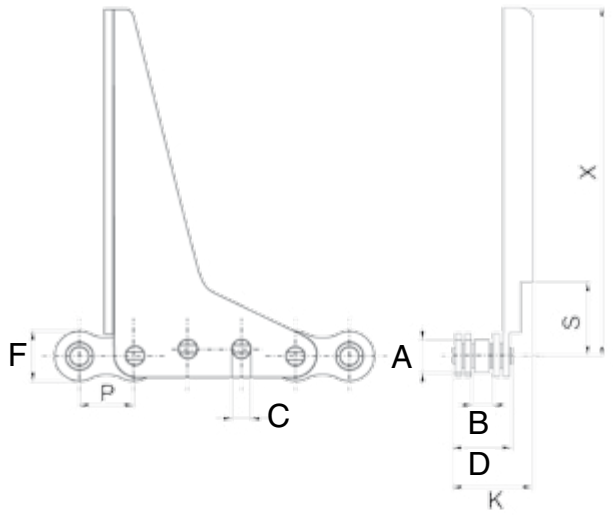

Chain number	Pitch	Roller diameter	Width between inner plates	Pin diameter	Pin length	Side plate height	Attachment width	Attachment height		Tensile strength
	P	A	B	C	L	F	K	X	S	kN
08 X3/Z1	12.70	7.75	4.88	4.09	13.00	9.90	16.00	85.00	17.50	82.60

Every effort has been taken to ensure that the data listed in this catalogue is correct. Challenge accepts no liability for any inaccuracies or damage caused. All dimensions in millimetres unless otherwise stated.

Roller Chain

Accumulation Chain

Note: all accumulation chain is available with various roller dimensions as well as different pitches to those quoted below.

To avoid confusion please always supply the chain and accumulation roller dimensions.

Accumulation Chain

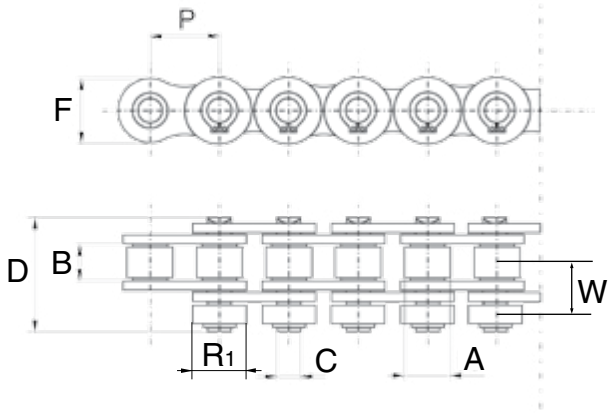

Chain number	Pitch P	Roller diameter A	Width between inner plates B	Pin diameter C	Pin length D	Roller diameter R1	Roller pitch W	Tensile strength kN
10B-1/R	15.875	10.16	9.65	5.08	25.4	14.2	15.1	22.7

Accumulation Chain

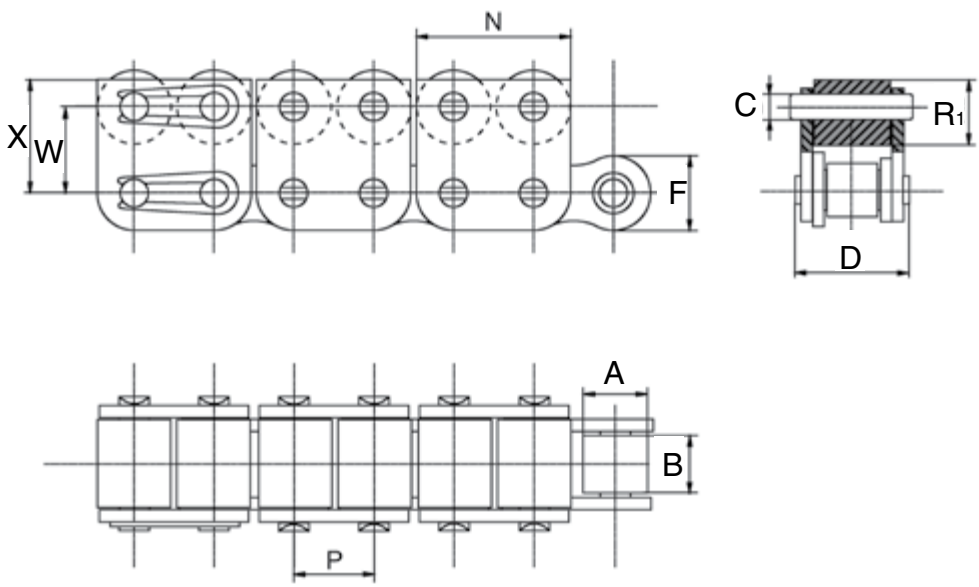

Chain number	Pitch P	Roller diameter A	Width between inner plates B	Roller diameter R1	Pin diameter C	Pin length D	Inner plate height F	W	X	N	Tensile strength kN
10B/R1	15.875	10.16	10.16	13.0	5.08	19.6	14.2	15.8	20.6	28.4	22.7

All dimensions in millimetres unless otherwise stated.

Every effort has been taken to ensure that the data listed in this catalogue is correct. Challenge accepts no liability for any inaccuracies or damage caused.

Roller Chain

Accumulation Chain

Accumulation Chain

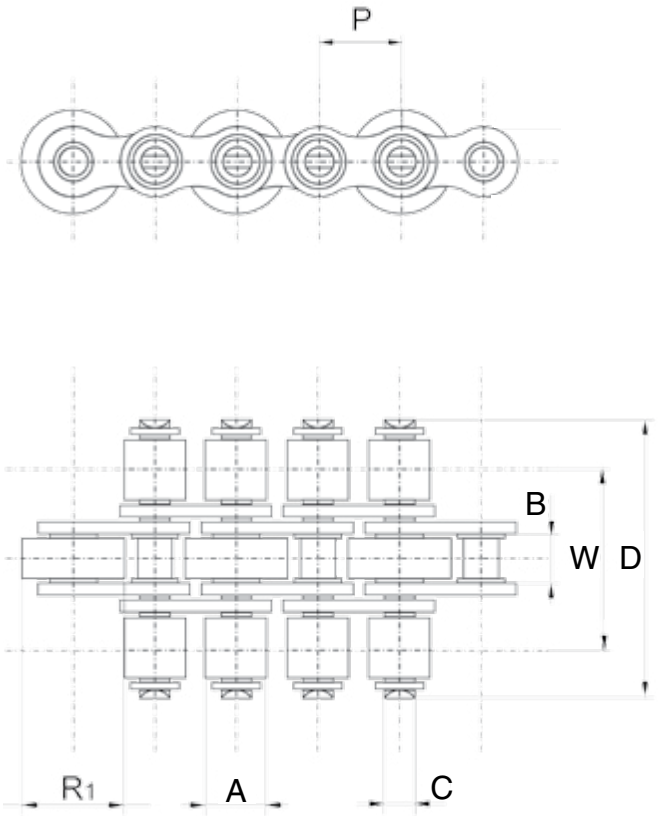

Chain number	Pitch P	Roller diameter. A	Width between inner plates B	Pin diameter C	Pin length D	Roller diameter R_1	Roller pitch W	Tensile strength kN	Weight kg/m
08B-1/S6	12.70	8.51	7.75	4.47	27	16.0	19.1	18.2	1.17
08B-1/S7	12.70	8.51	7.75	4.47	33	16.0	22.0	18.2	1.38
12B-1/S1	19.05	12.07	11.68	5.72	48	26.0	31.5	29.5	3.50
12B-1/S2	19.05	12.07	11.68	5.72	43	26.0	29.2	29.5	3.20
12B-1/S2a	19.05	12.07	11.68	5.72	43	24.0	29.2	29.5	2.80
12B-1/S3	19.05	12.07	11.68	5.72	40	28.0	27.0	29.5	3.40
16B-1/S5	25.40	15.88	17.02	8.28	65	38.5	44.9	58.0	7.00

Every effort has been taken to ensure that the data listed in this catalogue is correct. Challenge accepts no liability for any inaccuracies or damage caused. All dimensions in millimetres unless otherwise stated.

Roller Chain

Accumulation Chain

Accumulation Chain

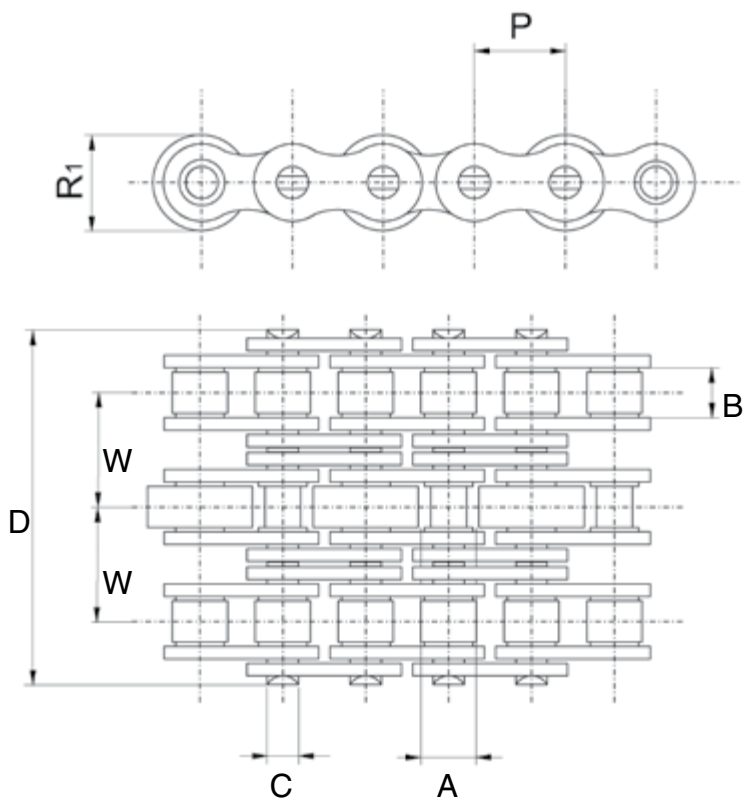

Chain number	Pitch	Roller diameter	Width between inner plate	Pin diameter	Pin length	Roller diameter	Roller pitch	Tensile strength
	P	A	B	C	D	R_1	W	kN
12B-3/S2a	19.05	12.07	11.68	5.72	61.7	24.0	19.46	88.5
12B-3/S2	19.05	12.07	11.68	5.72	61.7	26.0	19.46	88.5

All dimensions in millimetres unless otherwise stated. Every effort has been taken to ensure that the data listed in this catalogue is correct. Challenge accepts no liability for any inaccuracies or damage caused.

Roller Chain

Stainless Steel Transmission Roller Chain (Grade 304)

Stainless Steel Transmission Roller Chain

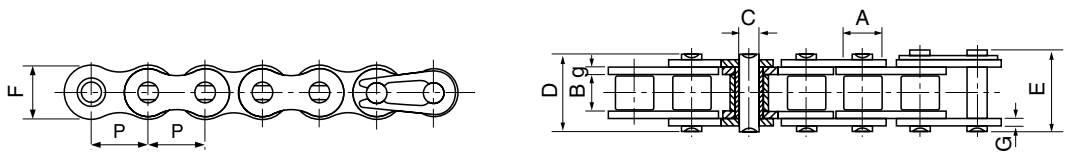

ISO Chain number	ANSI Chain number	Pitch P	Roller diameter A	Width between inner plates B	Pin diameter C	Pin length D	Pin length E	Inner plate height F	Plate thick-ness g/G	Minimum tensile strength kN	Average tensile strength kN	Weight kg/m
	*35SS	9.525	5.08	4.77	3.58	12.40	13.17	9.00	1.30	5.50	6.60	0.33
	40SS	12.700	7.95	7.85	3.96	16.60	17.80	12.00	1.50	9.60	10.80	0.63
	50SS	15.875	10.16	9.40	5.08	20.70	22.20	15.09	2.03	15.20	17.20	1.03
	60SS	19.050	11.91	12.57	5.94	25.90	27.70	18.00	2.42	21.70	26.40	1.51
	80SS	25.400	15.88	15.75	7.92	32.70	35.00	24.00	3.25	38.90	46.60	2.62
	100SS	31.750	19.05	18.90	9.53	40.40	44.70	30.00	4.00	60.00	70.20	3.94
04BSS		6.000	4.00	2.80	1.85	6.80	7.80	5.00	0.60	2.00	2.40	0.11
05BSS		8.000	5.00	3.00	2.31	8.20	8.90	7.10	0.80	3.50	4.10	0.20
#06BSS		9.525	6.35	5.72	3.28	13.15	14.10	8.20	1.30	6.20	6.80	0.41
08BSS		12.700	8.51	7.75	4.45	16.70	18.20	11.80	1.60	12.00	14.30	0.70
10BSS		15.875	10.16	9.65	5.08	19.50	20.90	14.70	1.70	14.50	17.20	0.94
12BSS		19.050	12.07	11.68	5.72	22.50	24.20	16.00	1.85	18.50	20.90	1.16
16BSS		25.400	15.88	17.02	8.28	36.10	37.40	21.00	4.15/3.1	40.00	47.60	2.73
20BSS		31.750	19.05	19.56	10.19	41.30	45.00	26.40	4.5/3.5	59.00	69.60	3.73

***** Bush chain: **A** in the table indicates the external diameter of the bush
# Straight side plate chain

Duplex and Triplex chains are also available.

Standard boxed lengths are 5 metres or 10 feet.
Each box contains one CL. Special lengths available.

Every effort has been taken to ensure that the data listed in this catalogue is correct. Challenge accepts no liability for any inaccuracies or damage caused.

All dimensions in millimetres unless otherwise stated.

Roller Chain

Nickel Plated Transmission Roller Chain

Nickel + Zinc Plated Transmission Roller Chain

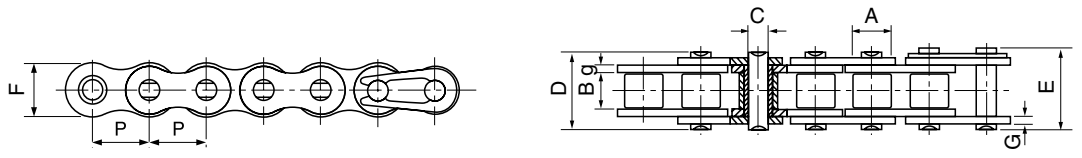

ISO Chain number	ANSI Chain number	Pitch P	Roller diameter A	Width between inner plates B	Pin diameter C	Pin length D	Pin length E	Inner plate height F	Plate thick-ness g/G	Minimum tensile strength kN	Average tensile strength kN	Weight kg/m
	*25NP	6.350	3.30	3.18	2.31	7.90	8.40	6.00	0.80	3.50	4.60	0.15
	*35NP	9.525	5.08	4.77	3.58	12.40	13.17	9.00	1.30	7.90	10.80	0.33
	41NP	12.700	7.77	6.25	3.58	13.75	15.00	9.91	1.30	6.67	12.60	0.41
	40NP	12.700	7.95	7.85	3.96	16.60	17.80	12.00	1.50	14.10	17.50	0.62
	50NP	15.875	10.16	9.40	5.08	20.70	22.20	15.09	2.03	22.20	29.40	1.02
	60NP	19.050	11.91	12.57	5.94	25.90	27.70	18.00	2.42	31.80	41.50	1.50
	80NP	25.400	15.88	15.75	7.92	32.70	35.00	24.00	3.25	56.70	69.40	2.60
	100NP	31.750	19.05	18.90	9.53	40.40	44.70	30.00	4.00	88.50	109.20	3.91
04BNP		6.000	4.00	2.80	1.85	6.80	7.80	5.00	0.60	3.00	3.20	0.11
05BNP		8.000	5.00	3.00	2.31	8.20	8.90	7.10	0.80	5.00	5.90	0.20
#06BNP		9.525	6.35	5.72	3.28	13.15	14.10	8.20	1.30	9.00	10.40	0.41
08BNP		12.700	8.51	7.75	4.45	16.70	18.20	11.80	1.60	18.00	19.40	0.69
10BNP		15.875	10.16	9.65	5.08	19.50	20.90	14.70	1.70	22.40	27.50	0.93
12BNP		19.050	12.07	11.68	5.72	22.50	24.20	16.00	1.85	29.00	32.20	1.15
16BNP		25.400	15.88	17.02	8.28	36.10	37.40	21.00	4.15/3.1	60.00	72.80	2.71
20BNP		31.750	19.05	19.56	10.19	41.30	45.00	26.40	4.5/3.5	95.00	106.70	3.70

Duplex and Triplex chains are also available.

Zinc Plated Transmission Roller Chain

ISO Chain number	ANSI Chain number	Pitch P	Roller diameter A	Width between inner plates B	Pin diameter C	Pin length D	Pin length E	Inner plate height F	Plate thick-ness g/G	Minimum tensile strength kN	Average tensile strength kN	Weight kg/m
	*25ZP	6.350	3.30	3.18	2.31	7.90	8.40	6.00	0.80	3.50	4.60	0.14
	*35ZP	9.525	5.08	4.77	3.58	12.40	13.17	9.00	1.30	7.90	10.80	0.33
	41ZP	12.700	7.77	6.25	3.58	13.75	15.00	9.91	1.30	6.67	12.60	0.41
	40ZP	12.700	7.95	7.85	3.96	16.60	17.80	12.00	1.50	14.10	17.50	0.62
	50ZP	15.875	10.16	9.40	5.08	20.70	22.20	15.09	2.03	22.20	29.40	1.02
	60ZP	19.050	11.91	12.57	5.94	25.90	27.70	18.00	2.42	31.80	41.50	1.50
	80ZP	25.400	15.88	15.75	7.92	32.70	35.00	24.00	3.25	56.70	69.40	2.60
	100ZP	31.750	19.05	18.90	9.53	40.40	44.70	30.00	4.00	88.50	109.20	3.91
04BZP		6.000	4.00	2.80	1.85	6.80	7.80	5.00	0.60	3.00	3.20	0.11
05BZP		8.000	5.00	3.00	2.31	8.20	8.90	7.10	0.80	5.00	5.90	0.20
#06BZP		9.525	6.35	5.72	3.28	13.15	14.10	8.20	1.30	9.00	10.40	0.41
08BZP		12.700	8.51	7.75	4.45	16.70	18.20	11.80	1.60	18.00	19.40	0.69
10BZP		15.875	10.16	9.65	5.08	19.50	20.90	14.70	1.70	22.40	27.50	0.93
12BZP		19.050	12.07	11.68	5.72	22.50	24.20	16.00	1.85	29.00	32.20	1.15
16BZP		25.400	15.88	17.02	8.28	36.10	37.40	21.00	4.15/3.1	60.00	72.80	2.71
20BZP		31.750	19.05	19.56	10.19	41.30	45.00	26.40	4.5/3.5	95.00	106.70	3.70

* Bush chain: **A** in the table indicates the external diameter of the bush
# Straight side plate chain

Duplex and Triplex chains are also available.

Standard boxed lengths are 5 metres or 10 feet.
Each box contains one CL. Special lengths available.

All dimensions in millimetres unless otherwise stated.

Every effort has been taken to ensure that the data listed in this catalogue is correct. Challenge accepts no liability for any inaccuracies or damage caused.

Roller Chain

Side Bow Chain with Loose Tolerance Pin

Side Bow Chain with Loose Tolerance Pin

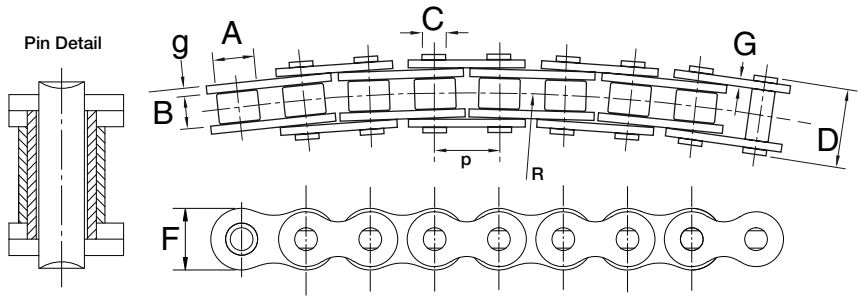

Chain number	Pitch	Roller diameter	Width between inner plates	Pin diameter	Pin length	Inner plate height	Plate thickness	Min. side bow radius	Average tensile strength	Weight
	P	A	B	C	D	F	g/G	R	kN	kg/m
40SB	12.700	7.95	7.85	3.45	16.9	11.7	1.50	350	11.00	0.80
50SB	15.875	10.16	9.40	4.37	20.7	14.9	2.03	400	20.00	1.09
60SB	19.050	11.91	12.57	5.34	26.6	18.0	2.42	500	28.00	1.54
63SB	19.050	11.91	12.68	5.08	28.8	17.2	2.42 / 2.03	350	25.00	1.40
80SB	25.400	15.88	15.75	7.19	34.0	24.0	3.25	715	39.00	2.60
08BSB	12.700	8.51	7.75	3.97	17.4	11.8	1.50	400	11.20	0.70
08BSBF1	12.700	8.51	7.75	3.97	16.3	11.8	1.60 / 1.20	400	11.00	0.65
10BSB	15.875	10.16	9.65	4.50	20.1	14.7	1.70	400	18.70	0.93
12BSB	19.050	12.07	11.68	5.12	23.1	16.0	1.85	500	21.00	1.16
16BSB	25.400	15.88	17.22	7.90	36.5	21.0	3.70 - 3.00	500	53.50	2.53

Side Bow Chain with Conical Pin

Side Bow Chain with Conical Pin

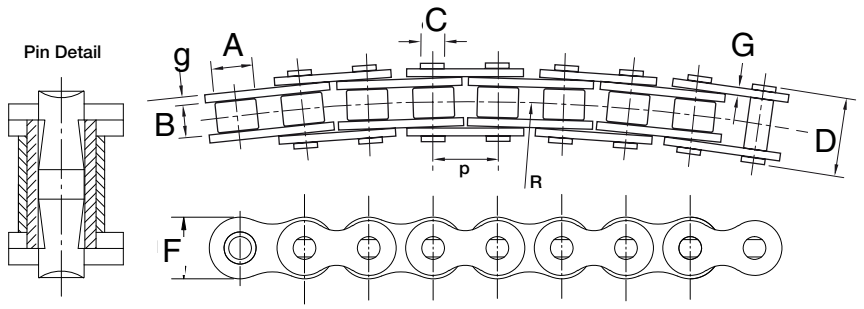

Chain number	Pitch	Roller diameter	Width between inner plates	Pin diameter	Pin length	Inner plate height	Plate thickness	Min. side bow radius	Average tensile strength	Weight
	P	A	B	C	D	F	g/G	R	kN	kg/m
40SB	12.700	7.95	7.85	3.98	16.9	11.7	1.50	350	11.00	0.80
50SB	15.875	10.16	9.40	5.08	20.7	14.9	2.03	400	20.00	1.09
60SB	19.050	11.91	12.57	5.94	26.6	18.0	2.42	500	28.00	1.54
80SB	25.400	15.88	15.75	7.92	34.0	24.0	3.25	711	39.00	2.60
08BSB	12.700	8.51	7.75	4.45	17.4	11.8	1.50	400	11.20	0.70
08BSBF1	12.700	8.51	7.75	4.45	16.3	11.8	1.60 - 1.20	400	11.00	0.65
10BSB	15.875	10.16	9.65	5.08	20.1	14.7	1.70	400	18.70	0.93
12BSB	19.050	12.07	11.68	5.72	23.1	16.0	1.85	500	21.00	1.16
16BSB	25.400	15.88	17.22	8.28	36.5	21.0	3.70 - 3.00	500	53.50	2.53
C2050SB	31.750	10.16	9.40	5.08	21.3	15.0	2.03	800	20.50	0.84

Every effort has been taken to ensure that the data listed in this catalogue is correct. Challenge accepts no liability for any inaccuracies or damage caused. All dimensions in millimetres unless otherwise stated.

Roller Chain Attachments

A-1 & K-1 Attachments

ISO No.	ANSI No.	P	I	J	K	L	M	O
	40	12.700	9.50	25.40	35.20	1.50	7.90	3.40
	50	15.875	12.70	31.75	46.20	2.03	10.30	5.50
	60	19.050	15.90	38.10	55.60	2.42	11.90	5.50
	80	25.400	19.10	50.80	64.80	3.25	15.90	6.80
	100	31.750	25.40	63.50	87.30	4.00	19.80	9.20
	120	38.100	28.60	76.20	108.50	4.80	23.00	9.80
	140	44.450	34.90	88.90	123.00	5.60	28.60	11.40
	160	50.800	38.10	101.60	142.80	6.40	31.80	13.10
*06B		9.525	8.00	19.04	27.00	1.30	6.50	3.50
08B		12.700	9.50	25.40	36.40	1.60	8.90	4.50
10B		15.875	14.30	31.75	44.60	1.70	10.31	5.30
12B		19.050	16.00	38.10	52.40	1.85	13.46	6.40
16B		25.400	19.10	50.80	72.60	3.10	15.88	6.40

A-1

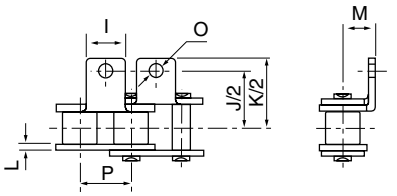

K-1

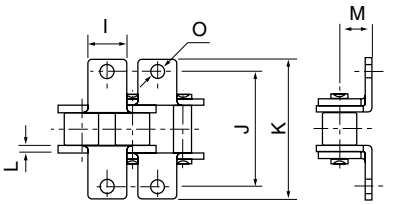

SA-1 & SK-1 Attachments

ISO No.	ANSI No.	P	I	J	Q	L	O
	40	12.700	9.50	19.05	12.70	1.50	3.40
	50	15.875	12.70	25.25	15.90	2.03	5.50
	60	19.050	15.90	29.33	18.30	2.42	5.50
	80	25.400	19.10	34.70	24.60	3.25	6.80
	100	31.750	25.40	43.30	31.80	4.00	9.20
	120	38.100	28.60	51.60	36.50	4.80	9.80
	140	44.450	34.90	62.00	44.50	5.60	11.40
	160	50.800	38.10	69.85	50.80	6.40	13.10
*06B		9.525	8.00	13.50	9.52	1.30	3.50
08B		12.700	9.50	18.90	13.35	1.60	4.30
10B		15.875	14.30	22.95	16.50	1.70	5.30
12B		19.050	16.00	28.60	21.45	1.85	6.40
16B		25.400	19.10	34.00	23.15	3.10	6.40

SA-1

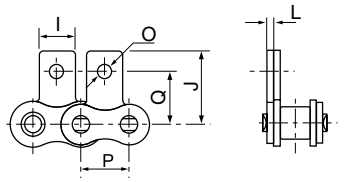

SK-1

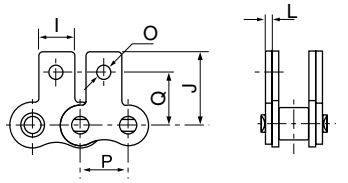

WA-2 & WK-2 Attachments

ISO No.	ANSI No.	P	I	R	J	K	L	M	O
	40	12.700	23.00	12.70	25.40	35.60	1.50	7.90	3.40
	50	15.875	28.80	15.88	31.80	46.80	2.03	10.30	5.50
	60	19.050	34.65	19.05	38.10	56.40	2.42	11.90	5.50
	80	25.400	45.90	25.40	50.80	73.20	3.25	15.90	6.80
	100	31.750	57.65	31.75	63.50	89.80	4.00	19.80	9.20
08B		12.700	24.00	12.70	25.40	36.40	1.60	8.90	4.30
10B		15.875	29.58	15.88	31.80	44.60	1.70	10.31	5.30
12B		19.050	34.05	19.05	38.10	52.40	1.85	13.46	6.40
16B		25.400	46.40	25.40	50.80	72.60	3.10	15.88	6.40

WA-2

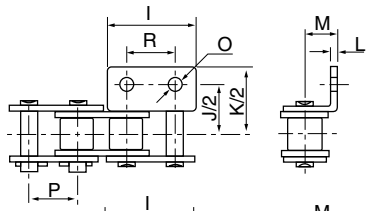

WK-2

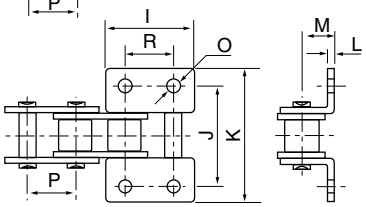

WSA-2 & WSK-2 Attachments

ISO No.	ANSI No.	P	I	R	J	Q	L	O
	40	12.700	23.00	12.70	17.40	12.70	1.50	3.40
	50	15.875	28.80	15.88	23.05	15.90	2.03	5.50
	60	19.050	34.65	19.05	26.86	18.30	2.42	5.50
	80	25.400	45.90	25.40	35.45	24.60	3.25	6.80
	100	31.750	57.65	31.75	44.00	31.80	4.00	9.20
08B		12.700	23.30	12.70	18.90	13.35	1.60	4.30
10B		15.875	29.58	15.88	22.95	16.50	1.70	5.30
12B		19.050	34.05	19.05	28.60	21.45	1.85	6.40
16B		25.400	46.40	25.40	34.00	23.15	3.10	6.40

WSA-2

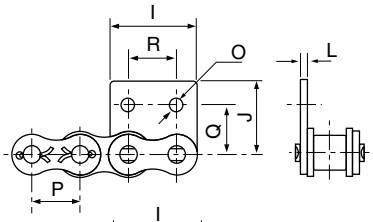

WSK-2

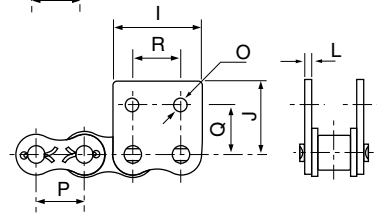

* Straight side plates

All dimensions in millimetres unless otherwise stated. Every effort has been taken to ensure that the data listed in this catalogue is correct. Challenge accepts no liability for any inaccuracies or damage caused.

Roller Chain Attachments

Attachment Chain Designation

1. Standard Chains with bent attachment A1 - one hole - one side - every outer

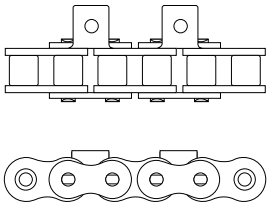

Chain Reference
06BA-2
08BA-2
10BA-2
12BA-2
16BA-2

2. Standard Chains with bent attachment K1 - one hole - both sides - every outer

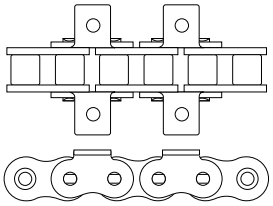

Chain Reference
06BK-2
08BK-2
10BK-2
12BK-2
16BK-2

3. Standard Chains with bent attachment A1 - one hole - one side - every outer and inner

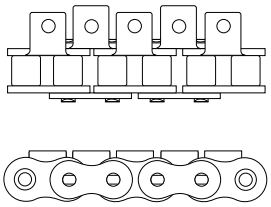

Chain Reference
06BA-1
08BA-1
10BA-1
12BA-1
16BA-1

4. Standard Chains with bent attachment K1 - one hole - both sides - every outer and inner

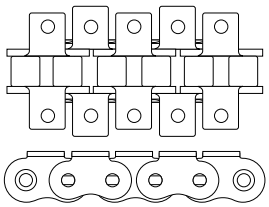

Chain Reference
06BK-1
08BK-1
10BK-1
12BK-1
16BK-1

5. Standard Chains with bent attachment WA2 - two holes - one side - every outer

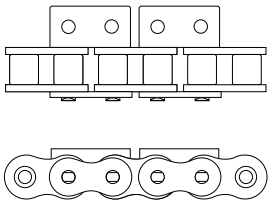

Chain Reference
06BWA-2
08BWA-2
10BWA-2
12BWA-2
16BWA-2

6. Standard Chains with bent attachment WK2 - two holes - both sides - every outer

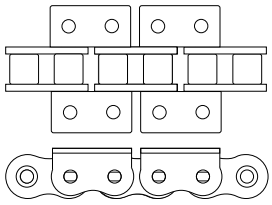

Chain Reference
06BWK-2
08BWK-2
10BWK-2
12BWK-2
16BWK-2

7. Standard Chains with straight attachment SA1 - one hole - one side - every outer

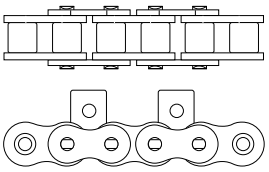

Chain Reference
06BSA-2
08BSA-2
10BSA-2
12BSA-2
16BSA-2

8. Standard Chains with straight attachment SK1 - one hole - both sides - every outer

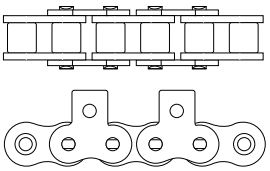

Chain Reference
06BSK-2
08BSK-2
10BSK-2
12BSK-2
16BSK-2

9. Standard Chains with straight attachment SA1 - one hole - one side - every outer and inner

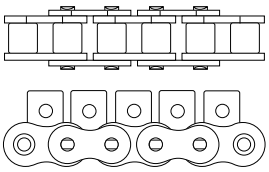

Chain Reference
06BSA-1
08BSA-1
10BSA-1
12BSA-1
16BSA-1

10. Standard Chains with straight attachment SK1 - one hole - both sides - every outer and inner

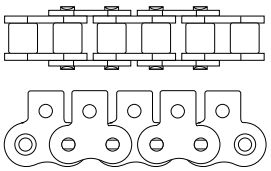

Chain Reference
06BSK-1
08BSK-1
10BSK-1
12BSK-1
16BSK-1

11. Standard Chains with straight attachment WSA2 - two holes - one side - every outer

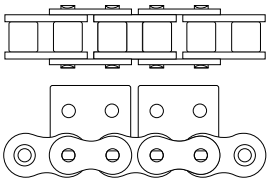

Chain Reference
06BWSA-2
08BWSA-2
10BWSA-2
12BWSA-2
16BWSA-2

12. Standard Chains with straight attachment WSK2 - two holes - both sides - every outer

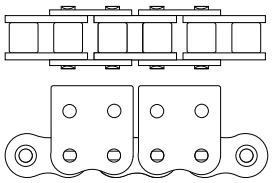

Chain Reference
06WSK-2
08BWSK-2
10BWSK-2
12BWSK-2
16BWSK-1

Standard boxed lengths are 5 metres or 10 feet.
Special lengths available.

Every effort has been taken to ensure that the data listed in this catalogue is correct. Challenge accepts no liability for any inaccuracies or damage caused.

All dimensions in millimetres unless otherwise stated.

Double Pitch Chain

Double Pitch Transmission Chain

Double Pitch Transmission Chain

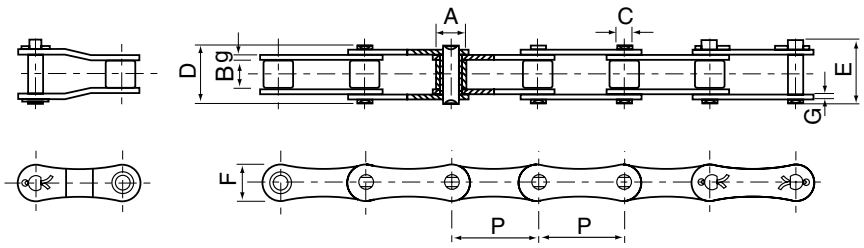

ISO Chain number	ANSI Chain number	Pitch P	Roller diameter A	Width between inner plates B	Pin diameter C	Pin length D	Pin length E	Inner plate height F	Plate thick-ness g/G	Minimum tensile strength kN	Average tensile strength kN	Weight kg/m
	A2040	25.40	7.95	7.85	3.96	16.60	17.80	12.00	1.50	14.10	16.70	0.42
208B		25.40	8.51	7.75	4.45	16.70	18.20	11.80	1.60	18.00	19.40	0.45
	A2050	31.75	10.16	9.40	5.08	20.70	22.20	15.00	2.03	22.20	28.10	0.73
210B		31.75	10.16	9.65	5.08	19.50	20.90	14.70	1.70	22.40	27.50	0.65
	A2060	38.10	11.91	12.57	5.94	25.90	27.70	18.00	2.42	31.80	36.80	1.02
212B		38.10	12.07	11.68	5.72	22.50	25.20	16.00	1.85	29.00	32.20	0.76
	A2080	50.80	15.88	15.75	7.92	32.70	36.50	24.00	3.25	56.70	65.70	1.70
216AH		50.80	15.88	15.75	7.92	36.20	39.40	24.00	4.00	56.70	70.00	2.17
216B		50.80	15.88	17.02	8.28	36.10	39.10	21.00	4.15/3.1	60.00	72.80	1.75
	A2100	63.50	19.05	18.90	9.53	40.40	44.70	30.00	4.00	88.50	102.60	2.55
220B		63.50	19.05	19.56	10.19	41.30	45.00	26.40	4.5/3.5	95.00	106.70	2.62
	A2120	76.20	22.23	25.22	11.10	50.30	54.30	35.70	4.80	127.00	147.30	4.06
224B		76.20	25.40	25.40	14.63	53.40	57.80	33.20	6.0/4.8	160.00	178.00	4.70
228B		88.90	27.94	30.99	15.90	65.10	69.50	36.70	7.5/6.0	200.00	222.00	6.23
232B		101.60	29.21	30.99	17.81	66.00	71.00	42.00	7.0/6.0	250.00	277.50	6.72

Standard boxed lengths are 5 metres or 10 feet.
Each box contains one CL. Special lengths available.

All dimensions in millimetres unless otherwise stated.

Every effort has been taken to ensure that the data listed in this catalogue is correct. Challenge accepts no liability for any inaccuracies or damage caused.

Double Pitch Chain

Double Pitch Conveyor Chain

Double Pitch Conveyor Chain

Small Roller Type

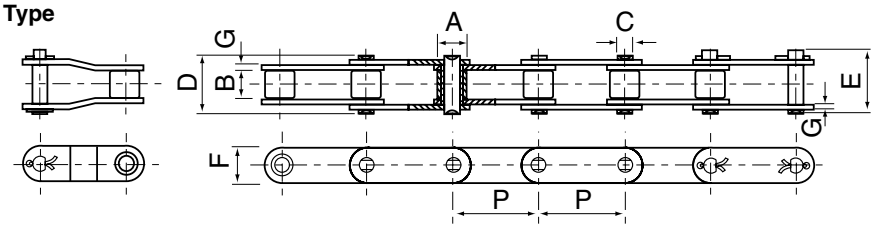

Large Roller Type

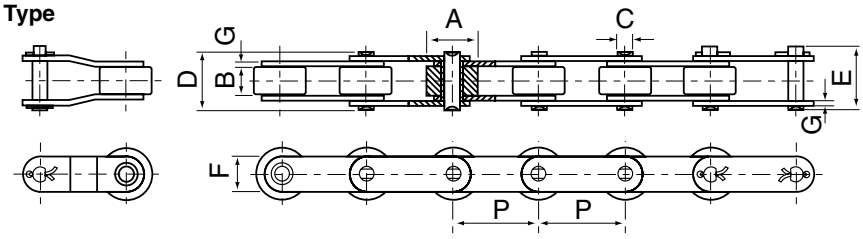

ISO Chain number	ANSI Chain number	Pitch P	Roller diameter A	Width between inner plates B	Pin diameter C	Pin length D	Pin length E	Side plate height F	Plate thick-ness G	Minimum tensile strength kN	Average tensile strength kN	Weight kg/m
	C2040	25.40	7.95	7.85	3.96	16.60	17.80	12.00	1.50	14.10	16.70	0.50
	C2042		15.88									0.84
	C2040H	25.40	7.95	7.85	3.96	18.80	19.90	12.00	2.03	14.10	17.20	0.65
C208B		25.40	8.51	7.75	4.45	16.70	18.20	11.80	1.60	18.00	19.40	0.55
C208BL			15.88									0.89
	C2050	31.75	10.16	9.40	5.08	20.70	22.20	15.00	2.03	22.20	28.10	0.78
	C2052		19.05									1.27
	C2060	38.10	11.91	12.57	5.94	25.90	27.70	18.00	2.42	31.80	36.80	1.12
	C2062		22.23									1.61
	C2060H	38.10	11.91	12.57	5.94	29.20	31.60	18.00	3.25	31.80	41.60	1.44
	C2062H		22.23									2.07
	C2080	50.80	15.88	15.75	7.92	32.70	36.50	24.00	3.25	56.70	65.70	2.08
	C2082		28.58									3.12
	C2080H	50.80	15.88	15.75	7.92	36.20	39.40	24.40	4.00	56.70	70.00	2.54
	C2082H		28.58									3.58
	C2100	63.50	19.05	18.90	9.53	40.40	44.70	30.00	4.00	88.50	102.60	3.01
	C2102		39.67									4.83
	C2100H	63.50	19.05	18.90	9.53	43.60	46.90	30.00	4.80	88.50	112.40	3.56
	C2102H		39.67									5.38
	C2120	76.20	22.23	25.22	11.10	50.30	54.30	35.70	4.80	127.00	147.30	4.66
	C2122		44.45									7.66
	C2120H	76.20	22.23	25.22	11.10	53.50	57.50	35.70	5.60	127.00	160.90	5.26
	C2122H		44.45									8.26
	C2160	101.60	28.58	31.75	14.27	64.80	69.60	47.80	6.40	226.80	278.90	8.23
	C2162		57.15									11.95
	C2160H	101.60	28.58	31.75	14.27	68.20	73.00	47.80	7.20	226.80	285.80	9.06
	C2162H		57.15									12.77

Standard boxed lengths are 5 metres or 10 feet.
Each box contains one CL. Special lengths available.

Every effort has been taken to ensure that the data listed in this catalogue is correct. Challenge accepts no liability for any inaccuracies or damage caused. All dimensions in millimetres unless otherwise stated.

Double Pitch Attachments

K-1 & SK-1 Attachments

ANSI Chain number	P	I	J	K	M	O	Q	T	U
A2040	25.40	19.1	25.4	39.6	9.1	3.4	11.1	20.5	5.5
A2050	31.75	23.8	31.8	49.0	11.1	5.5	14.3	25.0	6.6
A2060	38.10	28.6	42.9	67.8	14.7	5.5	17.5	32.9	9.2
A2080	50.80	38.1	55.6	87.8	19.1	6.8	22.2	43.5	11.0
A2100	63.50	47.6	66.6	107.5	23.4	9.2	28.6	50.4	13.0
A2120	76.20	57.2	79.3	127.5	27.8	11.0			

K-1 & SK-1 Attachments

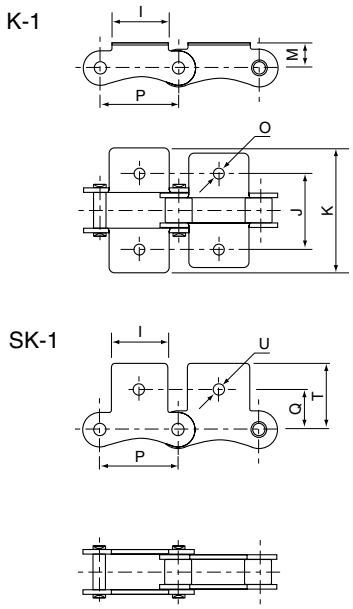

A-1, A-2 & K-1, K-2 Attachments

ISO Chain number	ANSI Chain number	P	I	R	J	K	M	O
	C2040 C2042	25.40	19.10	9.50	25.40	39.60	9.10	3.40
C208B C208BL		25.40	23.20	12.70	25.40	39.60	9.10	4.50
	C2050 C2052	31.75	23.80	11.90	31.80	49.00	11.10	5.50
	C2060 C2062	38.10	28.60	14.30	42.90	67.80	14.70	5.50
	C2060H C2062H	38.10	28.60	14.30	42.90	67.80	14.70	5.50
	C2080 C2082	50.80	38.10	19.10	55.60	87.80	19.10	6.80
	C2080H C2082H	50.80	38.10	19.10	55.60	87.80	19.10	6.80
	C2100 C2102	63.50	47.60	23.80	66.60	107.50	23.40	9.20
	C2100H C2102H	63.50	47.60	23.80	66.60	107.50	23.40	9.20
	C2120 C2122	76.20	57.20	28.60	79.30	121.40	27.80	11.00
	C2120H C2122H	76.20	57.20	28.60	79.30	121.40	27.80	11.00
	C2160 C2162	101.60	76.20	38.10	104.70	151.60	36.50	13.10
	C2160H C2162H	101.60	76.20	38.10	104.70	151.60	36.50	13.10

A-1, A-2 & K-1, K-2 Attachments

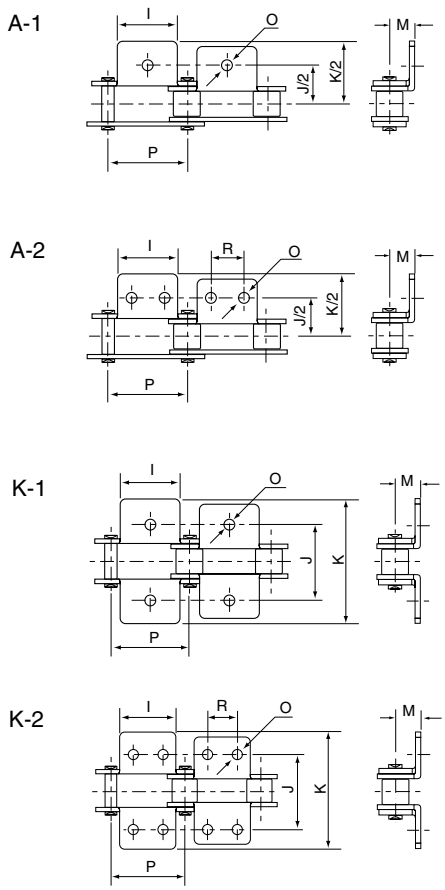

All dimensions in millimetres unless otherwise stated. Every effort has been taken to ensure that the data listed in this catalogue is correct. Challenge accepts no liability for any inaccuracies or damage caused.

Double Pitch Attachments

SA-1, SA-2 & SK-1, SK-2 Attachments

ISO Chain number	ANSI Chain number	P	I	R	Q_1	Q_2	J	O	U
	C2040 C2042	25.40	19.10	9.50	11.10	13.50	20.50	3.40	5.50
C208B C208BL		25.40	23.20	12.70	11.10	13.50	20.50	4.50	5.50
	C2050 C2052	31.75	23.80	11.90	14.30	15.90	25.00	5.50	6.60
	C2060 C2062	38.10	28.60	14.30	17.50	19.10	32.90	5.50	9.20
	C2060H C2062H	38.10	28.60	14.30	17.50	19.10	32.90	5.50	9.20
	C2080 C2082	50.80	38.10	19.10	22.20	25.40	43.50	6.60	11.00
	C2080H C2082H	50.80	38.10	19.10	22.20	25.40	43.50	6.60	11.00
	C2100 C2102	63.50	47.60	23.80	28.60	31.80	50.40	8.40	13.00
	C2100H C2102H	63.50	47.60	23.80	28.60	31.80	50.40	8.40	13.00

SA-1, SA-2 & SK-1, SK-2 Attachments

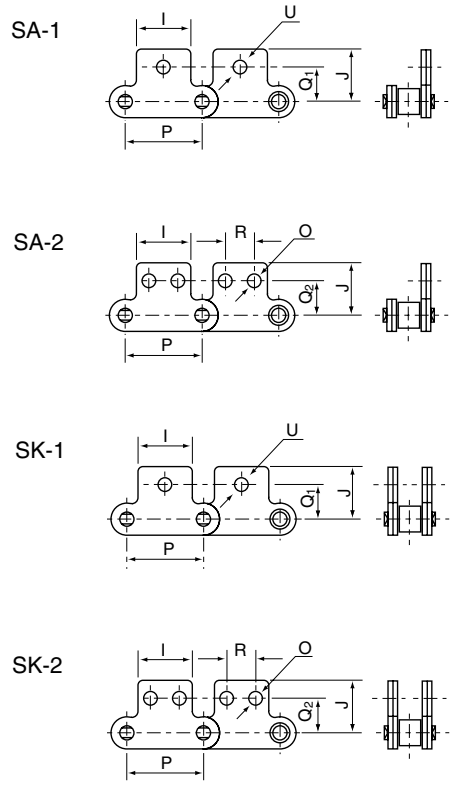

Special Chain
(Attachment Holes in Side Plate)

ANSI Chain number	Pitch	Roller diameter	Width between inner plates	Pin diameter	Pin length	Side plate height	Side plate hole diameter
	P	A	B	C	D	F	V
C2040 C2042	25.40	7.95 15.88	7.85	3.96	16.60	12.00	4.10
C2050 C2052	31.75	10.16 19.05	9.40	5.08	20.70	15.00	5.10
C2060 C2062	38.10	11.91 22.23	12.57	5.94	25.90	18.00	6.10
C2060H C2062H	38.10	11.91 22.23	12.57	5.94	29.20	18.00	6.10
C2080 C2082	50.80	15.88 28.58	15.75	7.92	32.70	24.00	8.10
C2080H C2082H	50.80	15.88 28.58	15.75	7.92	36.20	24.00	8.10
C2100 C2102	63.50	19.05 39.67	18.90	9.53	40.40	30.00	10.10
C2100H C2102H	63.50	19.05 39.67	18.90	9.53	43.60	30.00	10.10

Special Chain

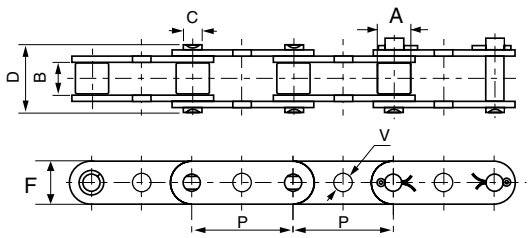

Every effort has been taken to ensure that the data listed in this catalogue is correct. Challenge accepts no liability for any inaccuracies or damage caused. All dimensions in millimetres unless otherwise stated.

CHALLENGE®

Double Pitch Chain

Extended Pin Chain

ANSI Chain number	Pitch P	B	C	S	D	E
C2040 C2042	25.40	7.85	3.96	9.50	25.10	26.20
C2050 C2052	31.75	9.40	5.08	11.90	31.30	33.10
C2060 C2062	38.10	12.57	5.94	14.30	38.60	40.60
C2060H C2062H	38.10	12.57	5.94	14.30	42.00	43.80
C2080 C2082	50.80	15.75	7.92	19.10	50.30	53.30
C2080H C2082H	50.80	15.75	7.92	19.10	53.50	55.00
C2100 C2102	63.50	18.90	9.53	23.80	61.80	66.10
C2100H C2102H	63.50	18.90	9.53	23.80	65.00	68.30
C2120H C2122H	76.20	25.22	11.10	28.60	79.60	83.60
C2160H C2162H	101.60	31.75	14.27	38.10	103.00	107.80

Extended Pin Chain

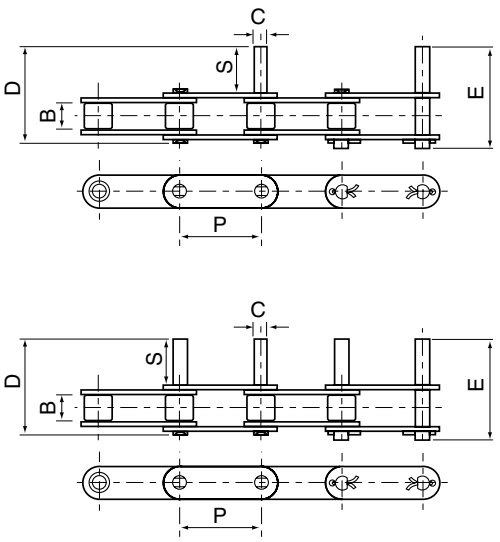

Extended Pin Chain

Chain number	Pitch P	B	C	V	O	S	D
C2060H	38.10	12.57	5.94	5.94	8.00	25.00	53.00
C2060H	38.10	12.57	5.94	8.08	10.00	35.00	63.00
C2060H	38.10	12.57	5.94	5.94	12.70	41.20	69.20
C2060H	38.10	12.57	5.94	5.94	14.28	41.20	69.20

Extended Pin Chain

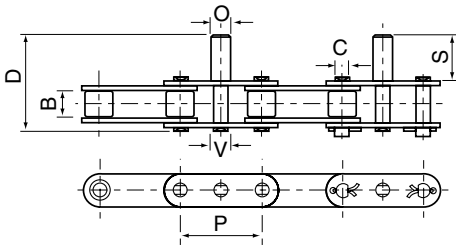

Hollow Pin Chain

Type B Bushed

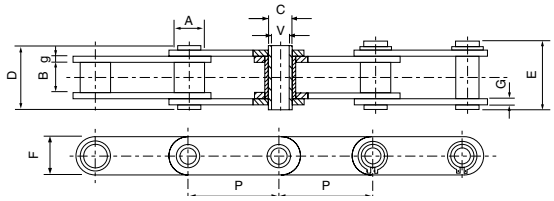

Hollow Pin Chain - Bushed Type (No Roller)

Chain number	Pitch P	Roller diameter A	Width between inner plates B	Pin diameter C	V	Pin length D	E	Side plate height F	Plate thick-ness g/G	Minimum tensile strength kN	Average tensile strength kN	Weight kg/m	Type
C2040HP	25.400	7.95	7.85	5.63	4.00	16.5	17.6	12.00	1.50	11.00	12.6	0.46	B
C2050HP	31.750	10.16	9.40	7.22	5.12	20.5	21.8	15.00	2.03	20.40	22.8	0.76	B
02060HP	38.100	11.91	12.70	8.31	6.00	25.8	26.8	17.00	2.42	24.00	27.1	1.02	B
C2080HP	50.800	15.88	15.75	11.40	8.05	32.5	33.8	24.00	3.25	50.00	55.2	1.81	B

All dimensions in millimetres unless otherwise stated. Every effort has been taken to ensure that the data listed in this catalogue is correct. Challenge accepts no liability for any inaccuracies or damage caused.

Leaf Chain

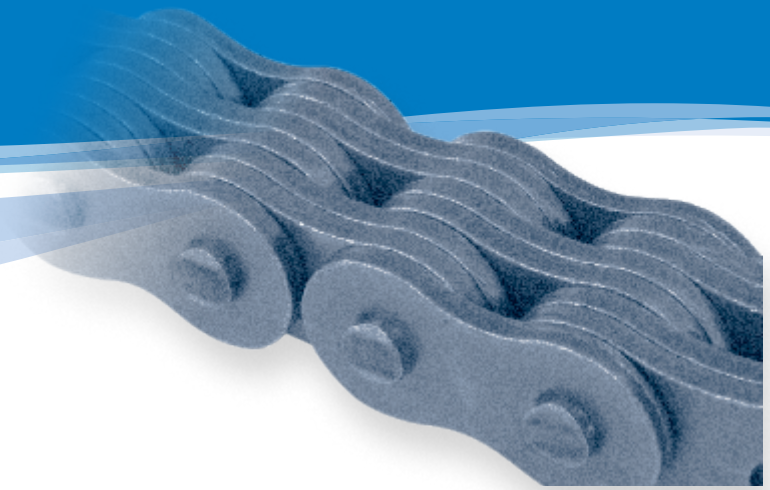

Challenge Leaf Chain

Applications:

Leaf chain is used in lifting applications such as Fork Lifts, Pneumatic and Hydraulic Jack fittings, etc. all of which move at slow speeds

Challenge offer Leaf Chain complying with ANSI standards in types BL (heavy duty), AL (light duty), EL and FLC

Where applicable, ISO equivalents are also given

Construction:

Link plates - produced from alloy steel, especially selected to withstand sudden shock loads. Heat treated to assure maximum breaking loads and wear resistance

Bearing pins - produced from heat treated alloy steel giving excellent resistance to bending

Leaf Chain

LH / BL Series Leaf Chain

ANSI B29.8, ISO 4347, DIN 8152

LH / BL Leaf Chain

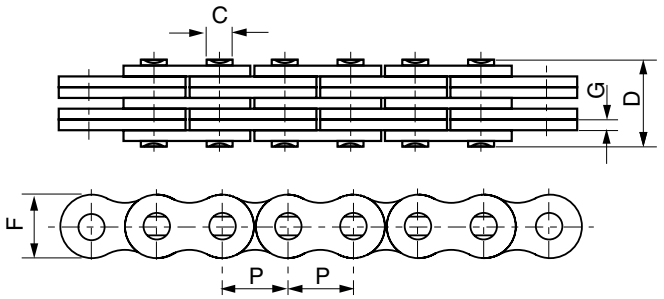

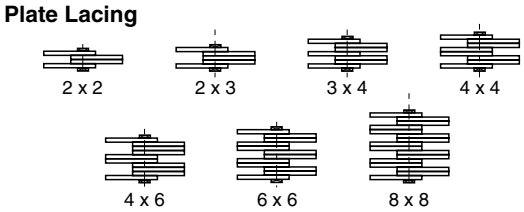

ISO Chain number	ANSI Chain number	Pitch P	Chain lacing	Plate height F	Plate thick-ness G	Pin diameter C	Pin length D	Minimum tensile strength kN	Average tensile strength kN	Weight kg/m
LH0822	BL422	12.700	2x2	12.07	2.08	5.09	11.05	22.20	27.60	0.64
LH0823	BL423		2x3				13.16	22.20	27.60	0.80
LH0834	BL434		3x4				17.40	33.40	41.40	1.12
LH0844	BL444		4x4				19.51	44.50	56.00	1.28
LH0846	BL446		4x6				23.75	44.50	56.00	1.60
LH0866	BL466		6x6				27.99	66.70	81.70	1.92
LH0888	BL488		8x8				36.45	89.00	109.40	2.56
LH1022	BL522	15.875	2x2	15.09	2.44	5.96	12.90	33.40	43.10	0.88
LH1023	BL523		2x3				15.37	33.40	43.10	1.10
LH1034	BL534		3x4				20.32	48.90	65.60	1.50
LH1044	BL544		4x4				22.78	66.70	84.50	1.80
LH1046	BL546		4x6				27.74	66.70	84.50	2.20
LH1066	BL566		6x6				32.69	100.10	125.10	2.65
LH1088	BL588		8x8				42.57	133.40	169.50	3.50
LH1222	BL622	19.050	2x2	18.11	3.30	7.94	17.37	48.90	63.60	1.45
LH1223	BL623		2x3				20.73	48.90	63.60	1.80
LH1234	BL634		3x4				27.43	75.60	102.80	2.50
LH1244	BL644		4x4				30.78	97.90	120.90	2.90
LH1246	BL646		4x6				37.49	97.90	120.90	3.60
LH1266	BL666		6x6				44.20	146.80	190.80	4.30
LH1288	BL688		8x8				57.61	195.70	238.80	5.80
LH1622	BL822	25.400	2x2	24.13	4.09	9.54	21.34	84.50	108.20	2.20
LH1623	BL823		2x3				25.48	84.50	108.20	2.70
LH1634	BL834		3x4				33.76	129.00	170.00	3.80
LH1644	BL844		4x4				37.90	169.00	214.60	4.30
LH1646	BL846		4x6				46.18	169.00	214.60	5.40
LH1666	BL866		6x6				54.46	253.60	324.50	6.50
LH1688	BL888		8x8				71.02	338.10	432.70	8.60

Available on reels.

All dimensions in millimetres unless otherwise stated. Every effort has been taken to ensure that the data listed in this catalogue is correct. Challenge accepts no liability for any inaccuracies or damage caused.

Leaf Chain

LH / BL Series Leaf Chain (cont)

ANSI B29.8, ISO 4347, DIN 8152

LH / BL Leaf Chain

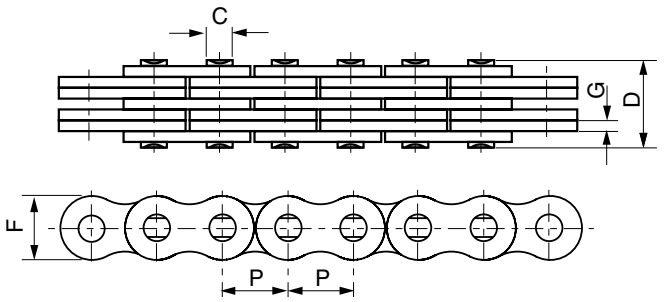

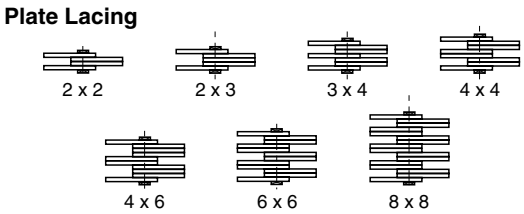

ISO Chain number	ANSI Chain number	Pitch P	Chain lacing	Plate height F	Plate thick-ness G	Pin diameter C	Pin length D	Minimum tensile strength kN	Average tensile strength kN	Weight kg/m
LH2022	BL1022		2x2				25.37	115.60	150.80	3.40
LH2023	BL1023		2x3				30.33	115.60	150.80	4.30
LH2034	BL1034		3x4				40.23	182.40	231.60	6.00
LH2044	BL1044	31.750	4x4	30.18	4.90	11.11	45.19	231.30	291.40	6.90
LH2046	BL1046		4x6				55.09	231.30	291.40	8.60
LH2066	BL1066		6x6				65.00	347.00	430.30	10.30
LH2088	BL1088		8x8				84.81	462.60	555.10	13.80
LH2422	BL1222		2x2				29.62	151.20	192.00	4.60
LH2423	BL1223		2x3				35.43	151.20	192.00	5.80
LH2434	BL1234		3x4				47.07	244.60	315.90	8.10
LH2444	BL1244	38.100	4x4	36.20	5.77	12.71	52.88	302.50	381.10	9.30
LH2446	BL1246		4x6				64.52	302.50	381.10	11.60
LH2466	BL1266		6x6				76.15	453.70	543.60	13.90
LH2488	BL1288		8x8				99.42	605.00	726.00	18.60
LH2822	BL1422		2x2				33.55	191.30	225.70	6.10
LH2823	BL1423		2x3				40.16	191.30	225.70	7.60
LH2834	BL1434		3x4				53.37	315.80	372.60	10.60
LH2844	BL1444	44.450	4x4	42.24	6.55	14.29	59.97	382.60	451.20	12.20
LH2846	BL1446		4x6				73.18	382.60	451.20	15.20
LH2866	BL1466		6x6				86.39	578.30	682.40	18.20
LH2888	BL1488		8x8				112.80	765.10	902.80	24.30
LH3222	BL1622		2x2				39.01	289.10	341.10	8.00
LH3223	BL1623		2x3				46.58	289.10	341.10	10.00
LH3234	BL1634		3x4				61.72	440.40	519.60	14.00
LH3244	BL1644	50.800	4x4	48.26	7.52	17.46	69.29	578.30	680.40	16.00
LH3246	BL1646		4x6				84.43	578.30	680.40	20.00
LH3266	BL1666		6x6				99.57	857.40	1000.70	24.00
LH3288	BL1688		8x8				129.84	1156.50	1364.60	32.00
LH4022	BL2022		2x2				51.74	433.70	511.70	15.80
LH4023	BL2023		2x3				61.70	433.70	511.70	19.80
LH4034	BL2034		3x4				81.61	649.40	766.20	27.70
LH4044	BL2044	63.500	4x4	60.33	9.91	23.81	91.57	867.40	1023.50	31.60
LH4046	BL2046		4x6				111.48	867.40	1023.50	39.50
LH4066	BL2066		6x6				131.39	1301.10	1535.20	47.40
LH4088	BL2088		8x8				171.22	1734.80	2046.50	63.20

Available on reels.

Every effort has been taken to ensure that the data listed in this catalogue is correct. Challenge accepts no liability for any inaccuracies or damage caused.

All dimensions in millimetres unless otherwise stated.

CHALLENGE®

Leaf Chain

LL/EL Series Leaf Chain

ANSI B29.8-1958, ISO 4347

LL/EL Leaf Chain

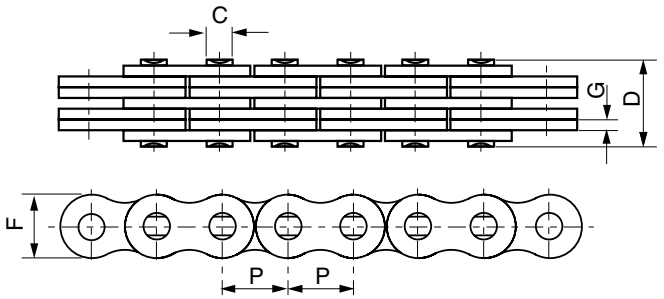

Plate Lacing

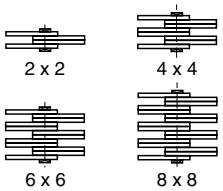

ISO Chain number	ANSI Chain number	Pitch P	Chain lacing	Plate height ness F	Plate thick- G	Pin diameter C	Pin length strength D	Minimum tensile strength kN	Average tensile metre kN	Weight kg/m
LL0822	EL0422	12.700	2x2	10.60	1.30	4.45	7.60	17.80	20.40	0.35
LL0844	EL0444		4x4				13.00	31.10	35.70	0.69
LL0866	EL0466		6x6				18.20	44.50	50.90	1.00
LL0888	EL0488		8x8				23.50	62.20	71.20	1.33
LL1022	EL0522	15.875	2x2	13.70	1.60	5.08	9.20	22.30	25.50	0.54
LL1044	EL0544		4x4				15.80	44.50	51.00	1.06
LL1066	EL0566		6x6				22.10	66.70	76.30	1.57
LL1088	EL0588		8x8				28.80	89.00	101.90	2.10
LL1222	EL0622	19.050	2x2	16.00	1.85	5.72	10.40	28.90	33.20	0.73
LL1244	EL0644		4x4				17.90	57.80	66.40	1.44
LL1266	EL0666		6x6				25.40	86.70	99.70	2.15
LL1288	EL0688		8x8				32.90	115.60	132.90	2.84
LL1622	EL0822	25.400	2x2	21.00	3.10	8.28	17.20	58.00	66.70	1.52
LL1644	EL0844		4x4				29.60	144.00	164.60	2.90
LL1666	EL0866		6x6				42.40	200.00	230.00	4.30
LL1688	EL0888		8x8				55.40	288.00	331.20	5.71
LL2022	EL1022	31.750	2x2	26.40	3.70	10.19	20.10	95.00	109.20	2.33
LL2044	EL1044		4x4				33.80	190.00	218.50	4.40
LL2066	EL1066		6x6				50.10	285.00	324.60	6.79
LL2088	EL1088		8x8				65.40	380.00	435.10	8.75
LL2422	EL1222	38.100	2x2	33.40	5.00	14.63	28.40	170.00	195.50	4.47
LL2444	EL1244		4x4				46.30	340.00	380.80	8.22
LL2466	EL1266		6x6				66.40	510.00	571.20	12.22
LL2488	EL1288		8x8				86.60	680.00	775.20	16.30
LL2822	EL1422	44.450	2x2	37.08	6.00	15.90	32.20	200.00	224.00	5.10
LL2844	EL1444		4x4				56.40	400.00	448.00	9.90
LL2866	EL1466		6x6				80.60	600.00	672.00	14.60
LL2888	EL1488		8x8				105.20	800.00	896.00	19.40
LL3222	EL1622	50.800	2x2	42.00	6.00	17.81	33.20	260.00	291.20	5.80
LL3244	EL1644		4x4				57.40	520.00	582.40	11.40
LL3266	EL1666		6x6				81.60	780.00	873.60	16.90
LL3288	EL1688		8x8				105.00	1050.00	1176.00	24.00
LL4022	EL2022	63.500	2x2	52.76	8.25	22.89	44.70	360.00	403.20	10.30
LL4044	EL2044		4x4				77.90	780.00	873.60	20.00
LL4066	EL2066		6x6				111.10	1080.00	1209.60	29.50
LL4088	EL2088		8x8				145.50	1560.00	1747.20	39.10
LL4822	EL2422	76.200	2x2	63.88	10.30	29.24	56.10	560.00	627.20	18.50
LL4844	EL2444		4x4				97.40	1120.00	1554.40	35.70
LL4866	EL2466		6x6				138.90	1168.00	1308.10	53.00
LL4888	EL2488		8x8				182.40	2240.00	2508.80	70.40

Available on reels.

All dimensions in millimetres unless otherwise stated.

Every effort has been taken to ensure that the data listed in this catalogue is correct. Challenge accepts no liability for any inaccuracies or damage caused.

Leaf Chain

AL Series Leaf Chain

AL Leaf Chain

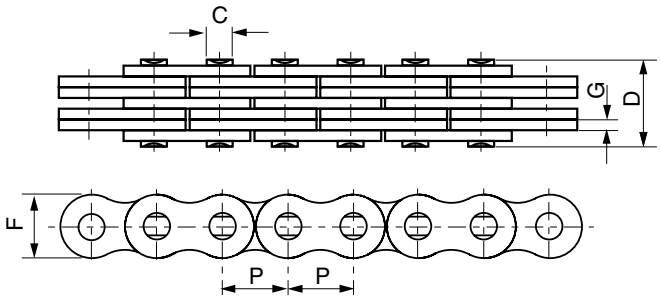

Plate Lacing

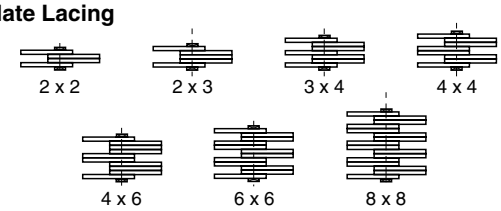

ANSI Chain number	Pitch P	Chain lacing	Plate height F	Plate thick-ness G	Pin diameter C	Pin length D	Minimum tensile strength kN	Average tensile strength kN	Weight kg/m
AL322	9.525	2x2	7.70	1.30	3.58	6.80	9.00	10.20	0.23
AL422	12.700	2x2	10.40	1.50	3.96	7.90	14.10	16.90	0.39
AL444		4x4				14.40	28.20	35.20	0.74
AL466		6x6				20.50	42.30	52.70	1.10
AL522	15.875	2x2	12.80	2.03	5.08	10.30	22.00	27.50	0.61
AL534		3x4				17.00	33.00	46.00	1.10
AL544		4x4				18.90	44.00	55.00	1.19
AL566		6x6				26.90	66.00	82.50	1.79
AL622	19.050	2x2	15.60	2.42	5.94	12.40	37.00	44.40	0.86
AL644		4x4				22.70	64.00	78.80	1.69
AL666		6x6				32.40	101.00	118.60	2.52
AL822	25.400	2x2	20.50	3.25	7.92	16.00	56.70	68.60	1.54
AL844		4x4				29.40	113.40	135.60	3.00
AL866		6x6				42.50	170.00	202.30	4.46
AL1022	31.750	2x2	25.60	4.00	9.53	19.60	88.50	107.10	2.37
AL1044		4x4				35.90	177.00	203.60	4.68
AL1066		6x6				52.30	265.00	315.30	7.00
AL1222	38.100	2x2	30.50	4.80	11.10	24.30	127.00	151.10	3.65
AL1244		4x4				43.80	254.00	299.70	7.05
AL1266		6x6				63.00	381.00	426.30	10.44
AL1444	44.450	4x4	36.40	5.60	12.64	51.30	372.70	413.60	10.34
AL1466		6x6				74.56	559.00	620.40	15.16
AL1644	50.800	4x4	41.60	6.40	14.21	58.06	471.00	522.80	12.98
AL1666		6x6				84.46	706.00	783.60	19.41

Available on reels.

Every effort has been taken to ensure that the data listed in this catalogue is correct. Challenge accepts no liability for any inaccuracies or damage caused. All dimensions in millimetres unless otherwise stated.

Leaf Chain

FLC Series Leaf Chain

FLC Leaf Chain

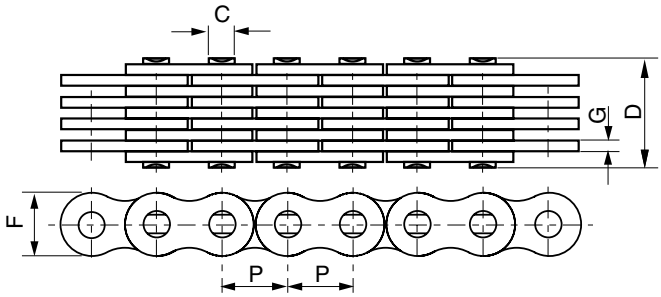

Chain number	Pitch P	Chain lacing	Plate height F	Plate thick-ness G	Pin diameter C	Pin length D	Minimum tensile strength kN	Average tensile strength kN	Weight kg/m
FL644	19.050	4x4	4.70	0.60	1.85	6.60	6.50	7.80	0.13
FL666	19.050	6x6	4.70	0.60	1.85	9.30	9.75	11.80	0.20
FL688	19.050	8x8	4.70	0.60	1.85	12.00	13.00	15.60	0.25
FL844	25.400	4x4	6.90	0.73	2.31	7.90	10.00	12.10	0.25
FL944	9.525	4x4	8.70	1.04	3.28	10.40	21.00	24.70	0.43
FL966	9.525	6x6	8.70	1.00	3.28	14.90	31.00	36.80	0.65
F1222	38.100	2x2	8.20	1.00	3.58	7.00	11.43	13.60	0.19
F1223	38.100	2x3	10.20	2.03	4.45	12.80	20.00	23.80	0.61
F1244	38.100	4x4	10.20	1.70	4.45	16.70	44.00	52.30	0.83

Available on reels.

All dimensions in millimetres unless otherwise stated. Every effort has been taken to ensure that the data listed in this catalogue is correct. Challenge accepts no liability for any inaccuracies or damage caused.

Leaf Chain

Clevis Pins

Clevis Pins

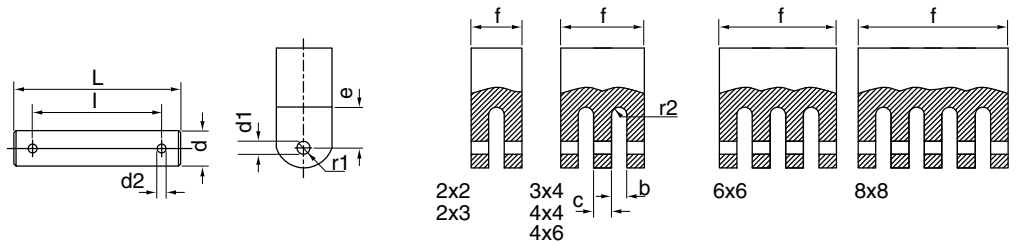

Type	l min.	L max	d max	d2	f max	b min	c max	d1	e min	r1 max	r2 max
BL422/AL522	10.8	17.0			10.7	4.2	-				2
BL423	12.7	18.9			12.6	6.4	-				3
BL434	17.0	23.2			16.9	4.2	2.0				2
BL444/AL544	19.0	25.2	5.80	1.6	18.9	4.2	4.0	5.15	9.0	6.5	2
BL446	23.0	29.2			22.9	6.4	4.0				3
BL466/AL566	27.0	33.3			26.9	4.2	4.0				2
BL488/AL588	35.5	41.8			35.4	4.2	4.0				2
BL522	12.8	19.4			12.7	5.0	-				2
BL523	15.0	21.6			14.9	7.5	-				3
BL534	20.0	26.6			19.9	5.0	2.4				2
BL544/AL644	22.5	29.1	5.95	2.0	22.4	5.0	4.8	6.00	11.0	8.0	2
BL546	27.0	33.7			26.9	7.5	4.8				3
BL566/AL666	32.0	38.7			31.9	5.0	4.8				2
BL588/AL688	42.5	49.3			42.4	5.0	4.8				2
BL623	20.0	30.7			19.9	10.3	-				5
BL634	27.0	37.7			26.9	6.8	3.2				3
BL644/AL844	30.0	40.7	7.93	3.2	29.9	6.8	6.4	8.00	14.0	9.5	3
BL646	37.0	47.7			36.9	10.3	6.4				5
BL666/AL866	43.0	53.7			42.9	6.8	6.4				3
BL688	56.5	67.2			56.4	6.8	6.4				3
BL823	25.0	35.7			24.9	12.8	-				6
BL834	33.0	43.7			32.9	8.5	4.0				4
BL844/AL1044	37.0	47.7	9.52	3.2	36.9	8.5	8.0	9.60	18.0	12.5	4
BL846	46.0	56.7			45.9	12.8	8.0				6
BL866/AL1066	53.0	63.7			52.9	8.5	8.0				4
BL888/AL1088	69.5	80.3			69.4	8.5	8.0				4
BL1023	30.0	42.4			29.8	15.1	-				7
BL1034	39.2	51.6			39.0	10.0	4.7				5
BL1044/AL1244	44.2	56.6	11.09	4.0	44.0	10.0	9.4	11.20	22.0	15.0	5
BL1046	54.2	66.6			54.0	15.1	9.4				7
BL1066/AL1266	63.2	75.6			63.0	10.0	9.4				5
BL1088/AL1288	79.9	92.4			79.7	10.0	9.4				5
BL1223	34.5	46.9			34.3	17.7	-				8
BL1234	46.2	58.6			46.0	11.8	5.5				5
BL1244/AL1444	50.0	64.4	12.70	4.0	49.0	11.8	11.0	12.80	26.0	19.0	5
BL1246	63.5	76.0			63.3	17.7	11.0				8
BL1266/AL1466	75.3	87.8			75.1	11.8	11.0				5
BL1288/AL1488	98.6	111.1			98.4	11.8	11.0				5
BL1423	38.7	51.1			38.5	20.1	-				10
BL1434	52.2	64.6			52.0	13.4	6.3				6
BL1444	58.6	71.1	14.27	4.0	58.4	13.4	12.6	14.35	31.0	22.0	10
BL1446	71.7	84.2			71.5	20.1	12.6				10
BL1466	85.1	97.7			84.9	13.4	12.6				10
BL1623	43.1	60.6			42.8	22.5	-				10
BL1634	58.0	75.5			57.7	15.0	7.1				7
BL1644	65.7	82.9	17.46	5.0	65.4	15.0	14.2	17.50	34.0	25.0	7
BL1646	79.9	97.4			79.6	22.5	14.2				10
BL1666	94.6	112.2			94.3	15.0	14.2				7
BL1688	124.0	141.6			123.7	15.0	14.2				7

Every effort has been taken to ensure that the data listed in this catalogue is correct. Challenge accepts no liability for any inaccuracies or damage caused. All dimensions in millimetres unless otherwise stated.

CHALLENGE®

Heavy Duty Drive Chain

RO Series

RO Series

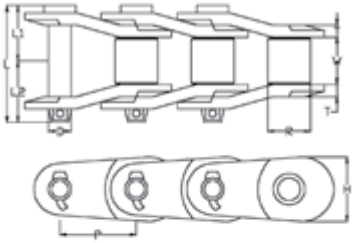

Chain Style U

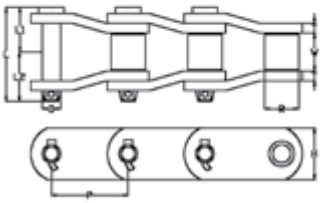

Chain Style K

Style of parts

Bushing:

Pin:

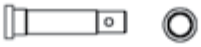

Side plate:

R03140 & R03160 “U” “K”

Challenge Chain number	Chain Style	Pitch Inches P	Pitch mm P	Roller diameter R	Width between inner plates W	Bearing Pin Diameter D	Pin Length L	Pin Length L1	Pin Length L2	Side plate height H	Plate Thickness s T	Tensile strength kgf	Approx Weight kg/m
RO3140	U	1.75	44.45	25.4	25.4	12.15	62.6	28.55	34.05	43.2	5.6	24000	7.7
RO3160	U	2.00	50.80	28.58	31.75	13.73	72.3	33.40	38.90	49.2	6.4	30600	10.0
RO1613AK	U	2.00	50.80	28.58	31.5	15.06	78.0	36.20	41.80	42.9	8.1	31750	11.3
RO3180	U	2.25	57.15	35.72	36.4	17.46	81.0	37.30	43.70	54	7.2	36300	14.3
RO25H ■	K	2.50	63.50	31.75	38.1	15.88	92.5	43.05	49.45	41.5	9.5	39700	13.7
RO1625	U	2.50	63.50	39.69	38.9	19.8	89.7	41.40	48.30	60.3	8	43000	16.3
RO588	K	2.61	66.27	22.23	28.6	11.11	67.0	32.00	35.00	28.6	6.4	14700	5.4
RO568 ■	K	3.07	77.90	41.28	40.1	19.05	97.0	45.05	51.95	54	9.5	52400	17.7
RO568-T	K	3.07	77.90	41.28	40.1	19.05	97.0	45.05	51.95	54	9.5	50000	17.7
RO3	K	3.08	78.11	31.75	38.1	15.88	86.5	40.05	46.45	38	8	27700	10.5
RO3H △	K	3.08	78.11	31.75	38.1	15.88	92.5	43.05	49.45	41.5	9.5	39700	12.4
RO3125 △	K	3.13	79.38	41.28	41.2	20.32	99.5	45.90	53.60	54	9.5	52000	18.8
RO1616 ■	K	3.50	88.90	44.45	38.6	22.23	111.7	51.60	60.10	54	12.7	63500	23.9
RO3924T	K	3.91	99.21	57.15	38.4	30.16	121.0	56.85	64.10	82.6	14.3	118000	45.0
RO5	K	4.06	103.20	44.45	38.6	22.23	111.7	51.60	60.10	54	12.7	63500	19.9
RO4	K	4.06	103.20	44.45	49.1	22.23	122.2	56.85	65.35	54	12.7	63500	21.0
RO4HF △	K	4.06	103.20	44.45	49.2	22.23	135.7	63.60	72.10	59	16	80300	23.2
RO4HF-T	K	4.06	103.20	44.45	49.2	22.23	135.7	63.60	72.10	59	16	69000	23.2
RO1245 ■	K	4.07	103.45	45.24	49.2	23.8	130.0	60.25	69.75	60	14.5	84600	27.2
RO1245T	K	4.07	103.45	45.24	49.2	23.8	130.0	60.25	69.75	60	14.5	77000	27.2
RO1343	K	4.09	103.89	47.63	49.2	25.4	132.0	62.25	69.75	70	14.5	105000	31.9
RO1343T	K	4.09	103.89	47.63	49.2	25.4	132.0	62.25	69.75	70	14.5	86500	32.9
RO1345	K	4.09	103.89	50.8	49.2	25.4	132.0	62.25	69.75	70	14.5	105000	32.9
RO41345T	K	4.09	103.89	50.8	49.2	25.4	132.0	62.25	69.75	70	14.5	86500	32.9
RO635 ■	K	4.00	114.30	57.15	52.4	27.9	135.5	64.25	71.25	76	14.5	113000	38.3
RO11634A	K	5.00	127.00	63.5	58.7	28.63	141.5	67.40	74.10	76	14.5	109000	39.8
RO1602AA ■	K	5.00	127.00	63.5	70.0	31.75	161.2	77.05	84.15	90	16	156000	52.3
RO6042 ■	K	6.00	152.40	76.2	76.3	38.1	184.0	86.70	97.30	101.6	19	207000	71.3

Note: RO3140 and RO3160 are specially designed for use where the chains on equipment are subject to heavy twisting and side bow caused by operating misalignment.

■ conforms to American National Standard Institute (ANSI) △ Conforms to American Petroleum Institute (API)

Special heat treating processed are applied to improve material characteristics.

Chains with a “T” mark have through hardended & Induction hardended pins to ensure wear resistance.

All dimensions in millimetres unless otherwise stated. Every effort has been taken to ensure that the data listed in this catalogue is correct. Challenge accepts no liability for any inaccuracies or damage caused.

Timber Chain

Welded Steel Mill Chain

Welded Steel Chain

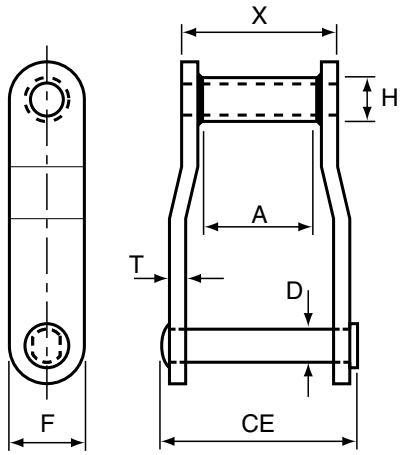

Chain number	Pitch mm	Pitch Inches	Average Ultimate Strength lbf	Max. Working Load lbf	Links Per Foot	Average Weight lb/ft	Dimensions CE	X	D	T	F	H	A
WR78	66.27	2.609	20000	3000	46	4.0	76.20	50.80	12.70	6.35	28.58	22.23	28.58
WH78	66.27	2.609	30000	3500	46	4.0	76.20	50.80	12.70	6.35	28.58	22.23	28.58
WR82	78.11	3.075	25000	3800	39	4.8	82.55	57.15	14.29	6.35	31.75	26.99	9.00
WH82	78.11	3.075	36000	4400	39	4.8	82.55	57.15	14.29	6.35	31.75	26.99	8.50
WR124	101.60	4.000	45500	6200	30	8.3	107.95	69.85	19.05	9.53	38.1	34.93	38.10
WH124	101.60	4.000	67000	7200	30	8.3	107.95	69.85	19.05	9.53	38.1	34.93	38.10
WH124HD Spc	103.20	4.063	119000	10500	30	14.7	120.65	76.20	25.40	12.7	50.8	44.45	41.28
WR111PLUS	120.90	4.760	52000	7500	26	9.5	123.83	85.73	19.05	9.53	44.45	34.93	60.33
WH111PLUS	120.90	4.760	77000	8850	26	9.5	123.83	85.73	19.05	9.53	44.45	34.93	60.33
WR110	152.40	6.000	45500	6750	20	7.2	117.48	76.20	19.05	9.53	38.1	34.93	47.63
WH110	152.40	6.000	67000	7875	20	7.2	117.48	76.20	19.05	9.53	38.1	34.93	47.63
WR106	152.40	6.000	45500	6200	20	7.0	107.95	69.85	19.05	9.53	38.1	34.93	41.28
WH106	152.40	6.000	67000	7200	20	7.0	107.95	69.85	19.05	9.53	38.1	34.93	41.28
WR132	153.67	6.050	78000	13000	20	14.2	158.75	111.13	25.40	12.7	50.8	44.45	73.03
WH132	153.67	6.050	111000	15300	20	14.2	158.75	111.13	25.40	12.7	50.8	44.45	73.03
WH132D	153.67	6.050	139500	16700	20	16.4	171.45	117.48	25.40	15.88	50.8	44.45	73.03
WR150	153.67	6.050	78000	13000	20	16.8	158.75	111.13	25.40	12.7	63.5	44.45	73.03
WH150	153.67	6.050	112000	15300	20	16.8	158.75	111.13	25.40	12.7	63.5	44.45	73.03
WH150XHD	153.67	6.050	151000	18200	20	19.7	171.45	117.48	28.58	15.88	63.5	44.45	73.03
WH155	153.67	6.050	145000	17750	20	20.0	168.28	114.30	28.58	14.29	63.5	44.45	73.03
WH159	155.58	6.125	230000	20250	20	26.5	168.28	117.48	31.75	15.88	76.2	50.8	73.03

WR - Welded steel chain - through hardened pins and case hardened bushes
WH - Weld steel chain - all components fully heat treated

Every effort has been taken to ensure that the data listed in this catalogue is correct. Challenge accepts no liability for any inaccuracies or damage caused. All dimensions in millimetres unless otherwise stated.

Timber Chain

Welded Steel Chain Attachments (Offset Side Bar)

Attachment number	Chain number	Weight	Dimensions												
		lb/ft	A	D	E	F	G	H	K	M	R	T	X	Y	Z
A1	WR/WH78	4.97	50.80	9.58	31.75	12.70	20.57	31.75	-	-	14.27	6.35	-	-	-
A1	WR/WH82	6.50	54.10	9.58	44.45	15.88	23.88	38.10	-	-	15.88	6.35	-	-	-
A1	WR/WH124	8.40	66.68	15.88	50.80	15.88	28.70	45.97	-	-	19.05	9.53	-	-	-
A2	WR/WH78	4.50	50.80	9.58	54.10	12.70	19.81	10.41	-	28.70	14.27	6.35	-	-	-
A2	WR/WH82	6.00	54.10	9.53	57.15	15.80	23.88	12.70	-	31.75	15.88	7.92	-	-	-
A2	WR/WH124	10.00	66.68	9.58	76.20	22.23	28.70	22.23	-	49.28	19.05	9.53	-	-	-
A2	WR/WH132	17.00	95.25	12.70	101.60	19.05	38.10	41.28	-	69.85	25.40	12.70	-	-	-
A225	WR/WH124	8.90	101.60	-	50.80	49.28	-	50.80	-	-	19.05	12.70		57.15	22.23
F10	WR/WH82	4.80	-	-	31.75	-	-	23.80	-	-	15.88	6.35	260.35	-	-
F30	WR/WH78	9.90	-	-	25.40	-	68.33	20.57	-	-	14.27	54.10	76.20	-	-
F659	WR/WH124	13.10	-	-	44.45	-	120.65	12.70	-	-	19.05	-	167.39	-	-

Attachment A1

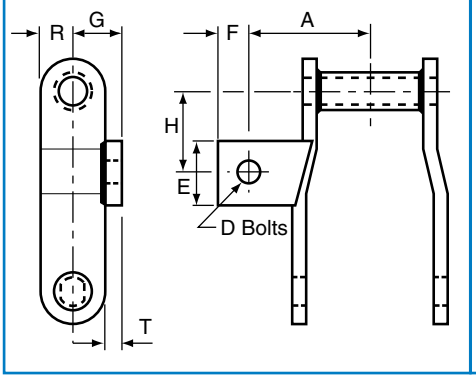

Attachment A2

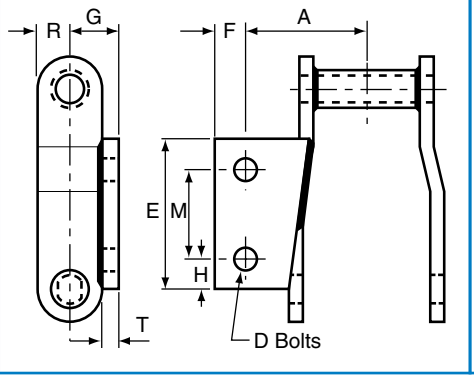

Attachment A225

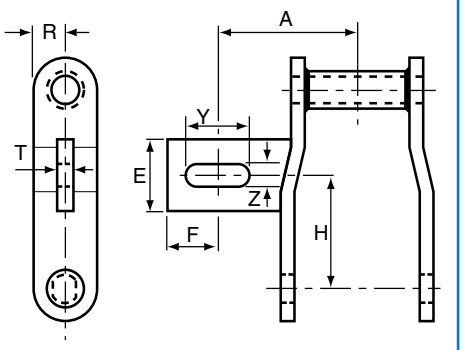

Attachment F10

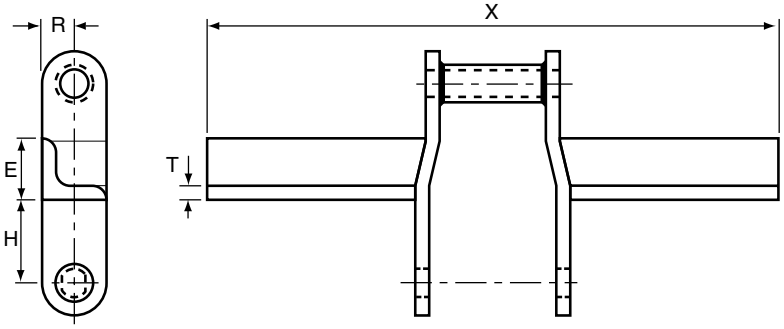

Attachment F30

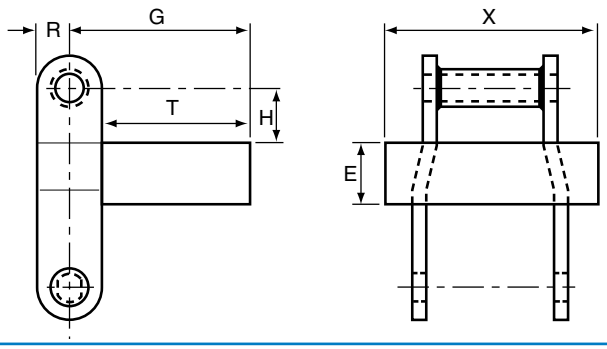

Attachment F659

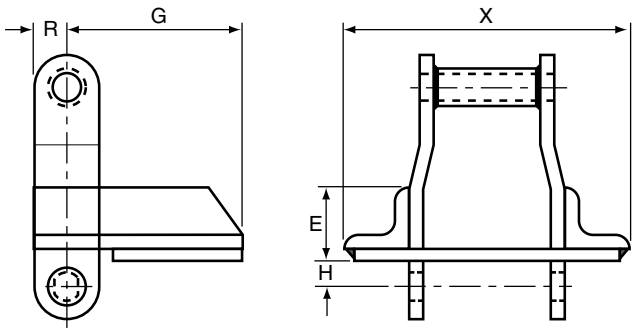

All dimensions in millimetres unless otherwise stated.

Every effort has been taken to ensure that the data listed in this catalogue is correct. Challenge accepts no liability for any inaccuracies or damage caused.

Timber Chain

Welded Steel Chain Attachments (Offset Side Bar)

Attachment number	Chain number	Weight	Dimensions												
		lb/ft	A	D	E	F	G	H	K	M	R	T	X	Y	Z
H2	WR/WH78	4.75	-	-	-	-	90.42	7.87	25.40	-	14.22	6.35	-	-	-
H2	WR/WH82	9.00	-	-	-	-	91.95	15.75	28.70	-	15.75	4.83	-	-	-
K1	WR/WH78	4.97	50.80	9.65	31.75	12.70	20.57	31.75	-	-	14.22	6.35	-	-	-
K1	WR/WH82	6.50	54.10	9.65	44.45	15.75	23.88	38.10	-	-	15.75	6.35	-	-	-
K1	WR/WH124	11.70	66.55	15.75	50.80	15.75	28.70	45.97	-	-	19.05	9.65	-	-	-
K2	WR/WH78	5.00	50.80	9.65	54.10	12.70	19.81	10.41	-	28.70	14.22	6.35	-	-	-
K2	WR/WH82	8.00	54.10	9.65	57.15	15.75	23.88	12.70	-	31.75	15.75	7.87	-	-	-
K2	WR/WH124	12.00	66.55	9.65	76.20	22.35	28.70	22.35	-	49.28	19.05	9.65	-	-	-
K2	WR/WH132	19.00	95.25	12.70	101.60	19.05	38.10	41.15	-	69.85	25.40	12.70	-	-	-
RR	WR/WH78	4.70	-	-	-	-	38.10	19.05	-	-	14.22	6.35	-	-	-
RR	WR/WH82	7.00	-	-	-	-	44.45	20.57	-	-	15.75	6.35	-	-	-
RR	WR/WH124	10.00	-	-	-	-	47.75	38.10	-	-	19.05	9.65	-	-	-

Attachment H2

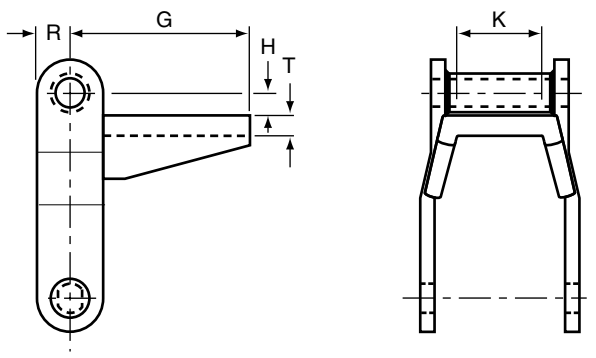

Attachment K1

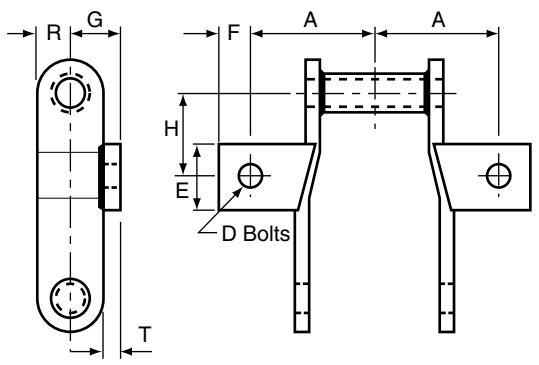

Attachment RR

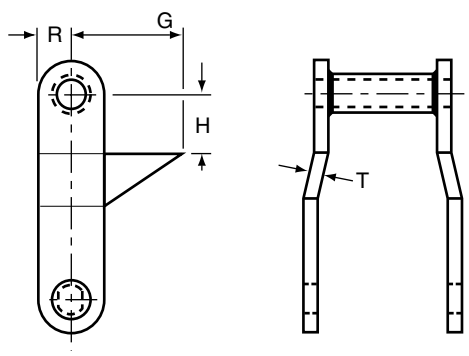

Attachment K2

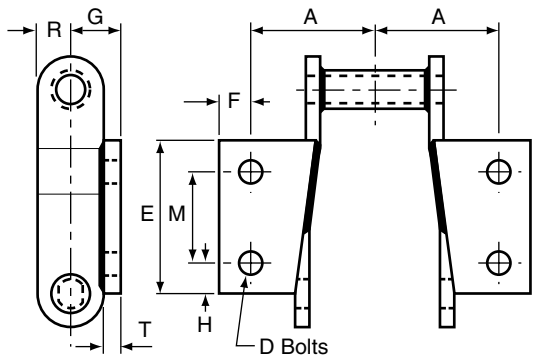

Every effort has been taken to ensure that the data listed in this catalogue is correct. Challenge accepts no liability for any inaccuracies or damage caused. All dimensions in millimetres unless otherwise stated.

Timber Chain

Offset Side Bar Roller Chain

Offset Side Bar Roller Chain

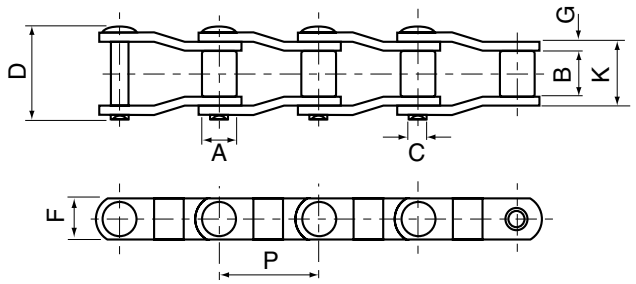

Material Spec.

	Side Bar	Pin	Bushing	Roller
S0-578	CH	CH	CC	CC
M0-88	C	CH	CC	CC
LXS-882	CH	AH	AC	CH
M0H-578	CH	CH	CC	CH

Chain number	Pitch inch	Pitch mm	Average Ultimate Strength lbf	Max. Working Load lbf	Links Per Foot	Average Weight lb/ft	Dimensions A	B	C	D	F	G	K
S0-578	2.609	66.269	19,000	2,200	4.6	2.7	22.23	26.99	9.53	52.78	25.40	3.97	36.51
M0-88	2.609	66.269	20,000	2,400	4.6	3.8	22.23	26.99	11.11	59.53	28.58	6.35	41.28
LXS-882	2.609	66.269	29,000	2,800	4.6	3.9	22.23	28.58	11.11	59.53	28.58	6.35	42.86
M0H-578	2.609	66.269	19,000	2,200	4.6	2.7	22.23	26.99	9.53	52.78	25.40	5.56	36.12

Straight Side Bar Roller Chain

Straight Side Bar Roller Chain

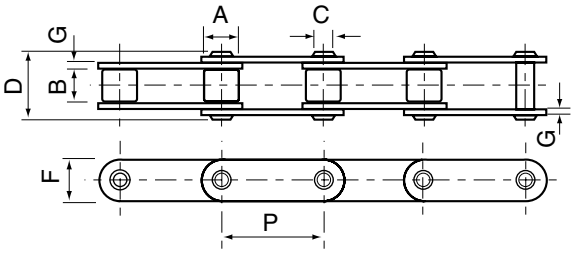

Material Spec.

	Side Bar	Pin	Bushing	Roller
MS-88	C	CH	CC	CC
81-X	CH	AC	AC	CH
81-XH	CH	AC	AC	CH
81-XHS	CH	AC	AC	CH
SS-188	CH	AC	CC	CC

Chain number	Pitch inch	Pitch mm	Average Ultimate Strength lbf	Max. Working Load lbf	Links Per Foot	Average Weight lb/ft	Dimensions A	B	C	D	F	K	Side Plate Thickness (G) Chain	Conn
MS-88	2.609	66.269	26,000	2,500	4.6	3.8	22.23	26.99	11.11	59.53	28.58	41.28	6.35	6.35
81-X	2.609	66.269	22,000	2,200	4.6	2.6	23.02	26.99	11.11	47.23	28.58	34.93	3.97	3.97
81-XH	2.609	66.269	41,800	5,000	4.6	3.9	23.02	26.99	11.11	59.18	31.75	42.86	7.94	5.56
81-XHS	2.609	66.269	41,800	5,000	4.6	4.2	23.02	26.99	11.11	63.50	32.94	42.86	7.94	7.94
SS-188	2.609	66.269	26,000	2,500	4.6	3.8	22.23	26.99	11.11	59.53	28.58	41.28	6.35	6.35

C: Carbon Steel
CC: Carbon Steel Case Hardened
AC: Alloy Steel Case Hardened
CH: Carbon Steel Heat Treated
AH: Alloy Steel Heat Treated

All dimensions in millimetres unless otherwise stated.

Every effort has been taken to ensure that the data listed in this catalogue is correct. Challenge accepts no liability for any inaccuracies or damage caused.

Timber Chain

Welded Steel Drag Chain

Welded Steel Drag Chain

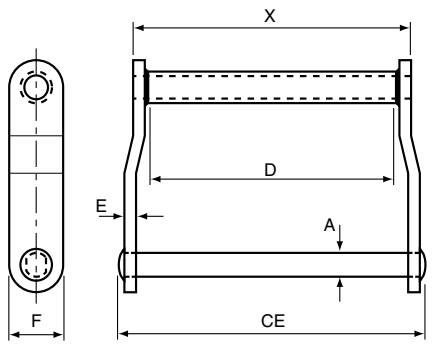

Attachment C1

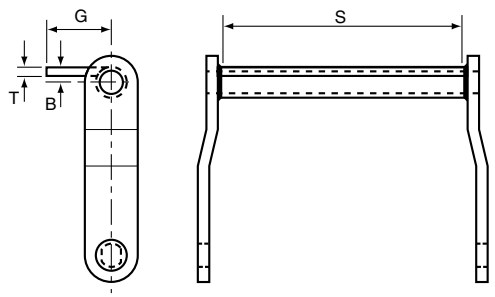

Attachment W1

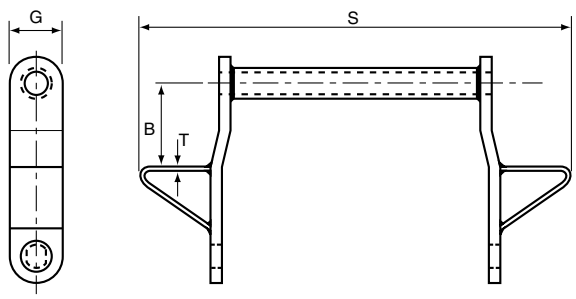

Chain number	Pitch mm	Pitch Inches	Average Ultimate Strength lbf	Max. Working Load lbf	Links Per Foot	Average Weight lb/ft	Dimensions CE	X	D	T	F	H	A
WDH102	127.00	5.000	60000	10000	24	11.8	234.95	196.85	19.05	9.53	38.1	/	161.93
WDH104	152.40	6.000	60000	10000	20	8.7	174.63	136.53	19.05	9.53	38.1	/	104.78
WD110	152.40	6.000	51000	8500	20	12.0	301.63	263.53	19.05	9.53	38.1	/	228.60
WDH110	152.40	6.000	60000	10000	20	12.0	301.63	263.53	19.05	9.53	38.1	/	228.60
WD113	152.40	6.000	55000	9200	20	15.0	317.50	269.88	22.23	12.7	38.1	/	228.60
WDH113	152.40	6.000	70000	11700	20	15.0	317.50	269.88	22.23	12.7	38.1	/	228.60
WD120	152.40	6.000	70000	11700	20	19.4	304.80	257.18	22.23	12.7	50.8	/	215.90
WDH120	152.40	6.000	90000	15000	20	19.4	304.80	257.18	22.23	12.7	50.8	/	215.90
WD112	203.20	8.000	51000	8500	15	9.8	301.63	263.53	19.05	9.53	38.1	/	228.60
WDH112	203.20	8.000	60000	10000	15	9.8	301.63	263.53	19.05	9.53	38.1	/	228.60
WD116	203.20	8.000	55000	9200	15	14.5	390.53	358.78	19.05	9.53	44.45	/	323.85
WDH116	203.20	8.000	69000	11500	15	14.5	390.53	358.78	19.05	9.53	44.45	/	323.85
WD118	203.20	8.000	70000	11700	15	19.8	425.45	377.83	22.23	12.7	50.8	/	336.55
WDH118	203.20	8.000	90000	15000	15	19.8	425.45	377.83	22.23	12.7	50.8	/	336.55
WD122	203.20	8.000	70000	11700	15	16.0	304.80	257.18	22.23	12.7	50.8	/	215.90
WDH122	203.20	8.000	90000	15000	15	16.0	304.80	257.18	22.23	12.7	50.8	/	215.90
WD480	203.20	8.000	70000	11700	15	18.1	371.48	323.85	22.23	12.7	50.8	/	279.40
WDH480	203.20	8.000	90000	15000	15	18.1	371.48	323.85	22.23	12.7	50.8	/	279.40
WDH580	203.20	8.000	123000	20500	15	19.4	371.48	323.85	25.40	12.7	50.8	/	279.40
WDH680	203.20	8.000	134000	22300	15	21.4	384.18	330.20	25.40	15.88	50.8	/	279.40

WD - Welded steel chain with rough-hardened pins and case hardened bushes
WDH - Welded steel chain - all components fully heat treated

Every effort has been taken to ensure that the data listed in this catalogue is correct. Challenge accepts no liability for any inaccuracies or damage caused. All dimensions in millimetres unless otherwise stated.

Timber Chain

Sharp Top Chain

Sharp Top Chain

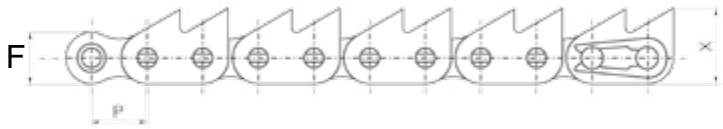

All teeth profiles available

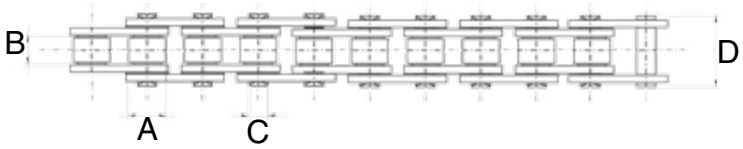

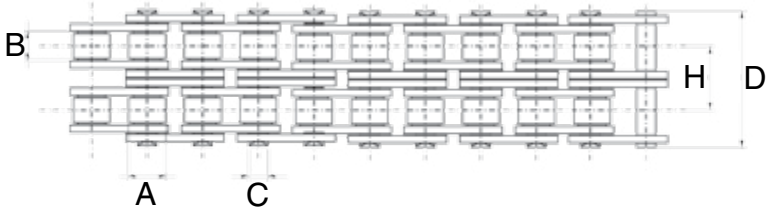

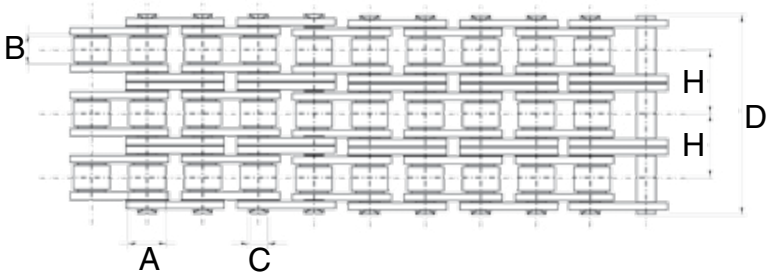

Chain number	Pitch	Roller diameter	With between inner plates	Pin diameter	Pin length	Side Plate Height	Transverse pitch	Tooth height	Tensile strength
	P	A	B	C	D	F	H	X	kN
16B-1Z	25.4	15.88	17.02	8.28	36.1	21.0	-	28	58
16B-2Z	25.4	15.88	17.02	8.28	68.0	21.0	31.88	28	110
16B-3Z	25.4	15.88	17.02	8.28	99.9	21.0	31.88	28	165

All dimensions in millimetres unless otherwise stated.

Every effort has been taken to ensure that the data listed in this catalogue is correct. Challenge accepts no liability for any inaccuracies or damage caused.

Timber Chain

Sharp Top Chain

Roller Chain with Special Straight and Sharp Plates

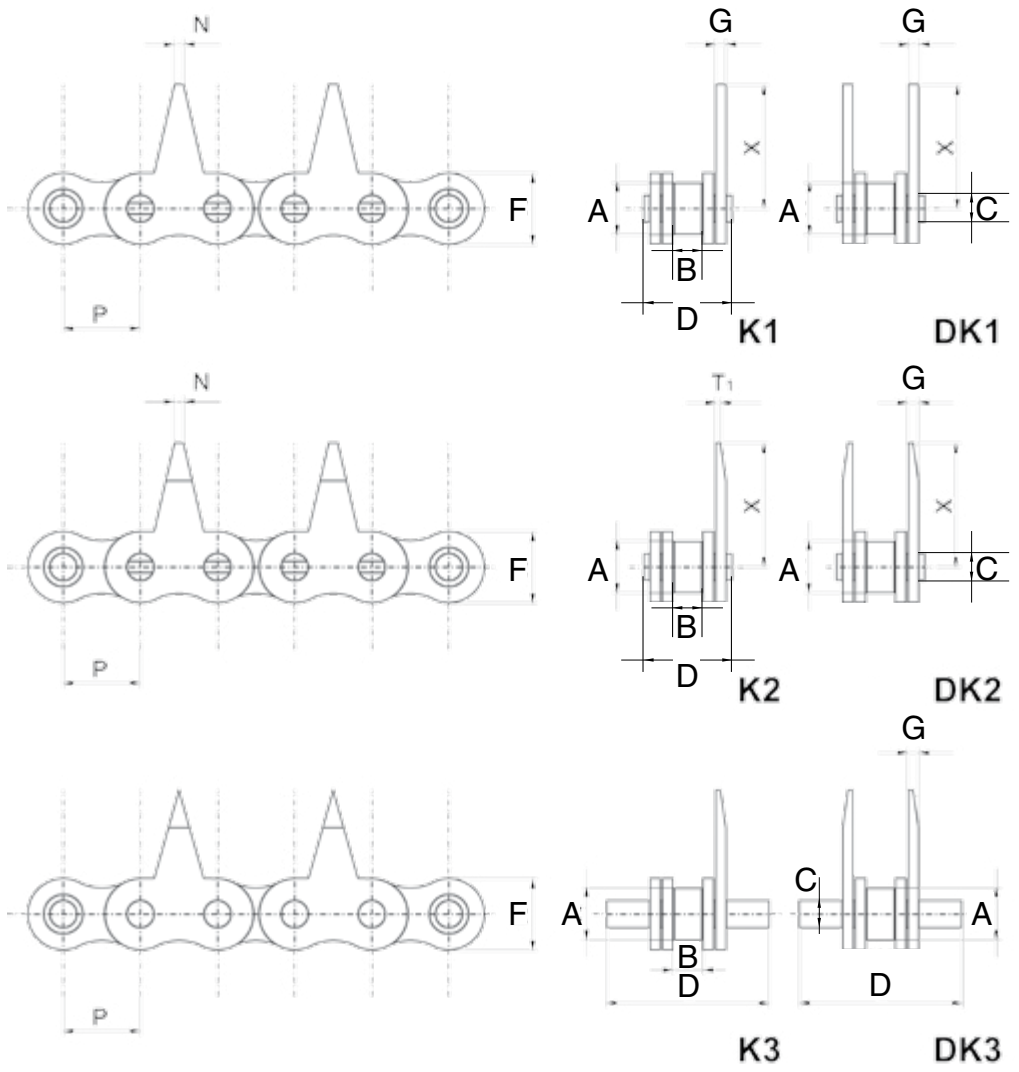

Chain number	Pitch	Roller diameter	Width between inner plates	Pin diameter	Side plate height	Plate thickness	Pin length	Attachment height			Tensile strength
	P	A	B	C	F	G	L	T1	X	N	kN
08 B/K1	12.70	8.51	7.75	4.45	10.80	1.60	16.70	-	14.5	1.2	18.2
08 B/K2	12.70	8.51	7.75	4.45	10.80	1.60	16.70	0.3	14.5	1.2	18.2
12 B/K3	19.05	12.07	11.68	5.71	16.13	1.85	29.35	-	14.5	-	29.5

Every effort has been taken to ensure that the data listed in this catalogue is correct. Challenge accepts no liability for any inaccuracies or damage caused. All dimensions in millimetres unless otherwise stated.

Note

Every effort has been taken to ensure that the data listed in this catalogue is correct. Challenge accepts no liability for any inaccuracies or damage caused.

Food Industry Chain

H2 Series

H2 Hollow Pin Chain

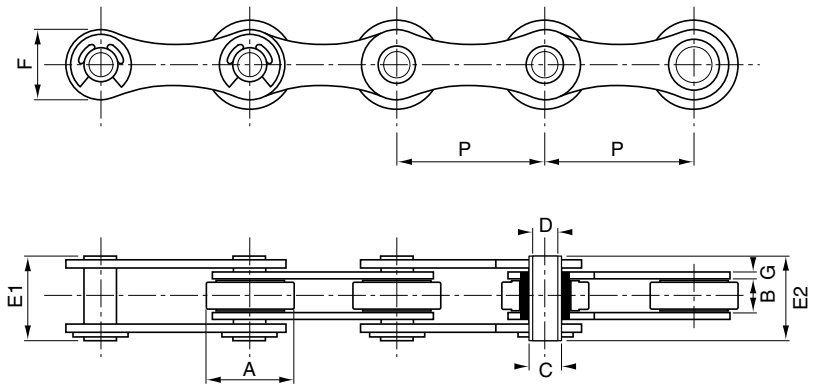

Challenge chain number	FK chain number	Pitch inches P	Pitch mm P	Roller diameter A	Width between inner plates B	Pin outside diameter C	Pin inside diameter D	Pin Length E1	Pin Length E2	Side plate height F	Plate thickness G	Tensile strength kN	Weight (Type C3) kg/m
Steel													
CH2-HP	FK1650HP	2.0	50.8	30	10.5	11.4	8.2	27.5	28.8	26	3.1	55	2.15
CH2-HP-D	FK1650HP-D	2.0	50.8	30	10.5	11.4	8.2	27.5	28.8	26	3.1	55	1.55
Zinc Plated													
CH2-HP-ZP	FK1650HPZP	2.0	50.8	30	10.5	11.4	8.2	27.5	28.8	26	3.1	55	2.15
CH2-HP-ZP-D	FK1650HPZP-D	2.0	50.8	30	10.5	11.4	8.2	27.5	28.8	26	3.1	55	1.55
Zinc Plated and Stainless													
CH2-HP-ZPSS	FK1650HPZS400	2.0	50.8	30	10.5	11.4	8.2	27.5	28.8	26	3.1	55	2.15
CH2-HP-ZPSS-D	FK1650HPZS400-D	2.0	50.8	30	10.5	11.4	8.2	27.5	28.8	26	3.1	55	1.55
Stainless													
CH2-HP-SS	FK1650HPSS	2.0	50.8	30	10.5	11.4	8.2	27.5	28.8	26	3.1	32	2.15
CH2-HP-SS-D	FK1650HPSS-D	2.0	50.8	30	10.5	11.4	8.2	27.5	28.8	26	3.1	32	1.55
CH2-HP-SS400	FK1650HPSS400	2.0	50.8	30	10.5	11.4	8.2	27.5	28.8	26	3.1	42	2.15
CH2-HP-SS400-D	FK1650HPSS400-D	2.0	50.8	30	10.5	11.4	8.2	27.5	28.8	26	3.1	42	1.55
Low Maintenance													
CH2-HP-ZP-TPB	FK1650HPZPK	2.0	50.8	30	10.5	11.4	8.2	27.5	28.8	26	3.1	55	2.15
CH2-HP-ZP-TPB-D	FK1650HPZPK-D	2.0	50.8	30	10.5	11.4	8.2	27.5	28.8	26	3.1	55	1.55
CH2-HP-SS-TPB	FK1650HPSSK	2.0	50.8	30	10.5	11.4	8.2	27.5	28.8	26	3.1	32	2.15
CH2-HP-SS-TPB-D	FK1650HPSSK-D	2.0	50.8	30	10.5	11.4	8.2	27.5	28.8	26	3.1	32	1.55
CH2-HP-SS400-TPB	FK1650HPSSK400	2.0	50.8	30	10.5	11.4	8.2	27.5	28.8	26	3.1	42	2.15
CH2-HP-SS400-TPB-D	FK1650HPSSK400-D	2.0	50.8	30	10.5	11.4	8.2	27.5	28.8	26	3.1	42	1.55

Every effort has been taken to ensure that the data listed in this catalogue is correct. Challenge accepts no liability for any inaccuracies or damage caused. All dimensions in millimetres unless otherwise stated.

Food Industry Chain

H2 Hollow pin chains are widely used in many conveyor applications such as agriculture, food and packaging. H2 chain is manufactured to the highest standard for maximum performance. The chain-lengths are matched (paired) and clearly labeled.

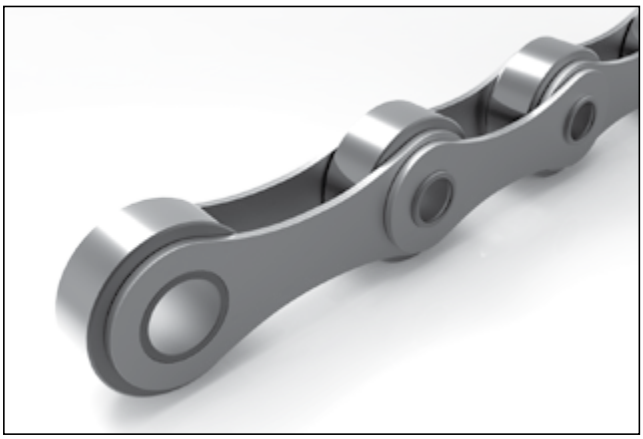

Low maintenance CH2 Series

with Thermoplastic bushings

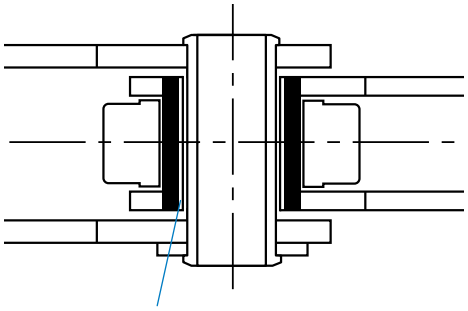

Versions:

- Steel
- Zinc
- Stainless
- Stainless 400
- PA6 roller
- Low maintenance

Challenge chain number	Description	Material Requirement				
		Hollow pin	Bush	Liner bush	Roller	Plate
Steel						
CH2-HP	Steel steel roller	ST-CH	ST-CH		ST-CH	ST-HT
CH2-HP-D	Steel plastic roller	ST-CH	ST-CH		PA6	ST-HT
Zinc Plated						
CH2-HP-ZP	Steel steel roller Zinc Plated	ST-CH-ZP	ST-CH-ZP		ST-CH-ZP	ST-HT-ZP
CH2-HP-ZP-D	Steel plastic roller Zinc Plated	ST-CH-ZP	ST-CH-ZP		PA6	ST-HT-ZP
Zinc Plated and SS						
CH2-HP-ZPSS	Stainless steel	SS-400-HT	SS-400-HT		ST-CH-ZP	ST-HT-ZP
CH2-HP-ZPSS-D	Stainless steel plastic roller	SS-400-HT	SS-400-HT		PA6	ST-HT-ZP
Stainless						
CH2-HP-SS	Stainless steel 400 series	SS-304	SS-304		SS-304	SS-304
CH2-HP-SS-D	Stainless steel 400 series plastic roller	SS-304	SS-304		PA6	SS-304
CH2-HP-SS400	Stainless steel 400 series	SS-400-HT	SS-400-HT		SS-304	SS-304
CH2-HP-SS400-D	Stainless steel 400 series plastic roller	SS-400-HT	SS-400-HT		PA6	SS-304
Low Maintenance						
CH2-HP-ZP-TPB	Steel steel roller TPB Zinc Plated	ST-CH-ZP	ST-CH-ZP	TPB	ST-CH-ZP	ST-HT-ZP
CH2-HP-ZP-TPB-D	Steel plastic roller TPB Zinc Plated	ST-CH-ZP	ST-CH-ZP	TPB	PA6	ST-HT-ZP
CH2-HP-SS-TPB	Stainless steel TPB Zinc Plated	SS-304	SS-304	TPB	SS-304	SS-304
CH2-HP-SS-TPB-D	Stainless steel plastic roller TPB Zinc Plated	SS-304	SS-304	TPB	PA6	SS-304
CH2-HP-SS400-TPB	Stainless steel 400 series TPB Zinc Plated	SS-400-HT	SS-400-HT	TPB	SS-304	SS-304
CH2-HP-SS400-TPB-D	Stainless steel 400 series plastic roller TPB Zinc Plated	SS-400-HT	SS-400-HT	TPB	PA6	SS-304

Key

ST-CH	- Steel, case hardened	SS-304	- Stainless steel 304
ST-CH-ZP	- Steel, case hardened, zinc plated	SS-400-HT	- Stainless steel 400 series, through hardened
ST-HT	- Steel, through hardened	PA6	- Nylon PA6
ST-HT-ZP	- Steel, through hardened, zinc plated	TPB	- Thermoplastic bushing

Every effort has been taken to ensure that the data listed in this catalogue is correct. Challenge accepts no liability for any inaccuracies or damage caused.

Agricultural Chain

Steel Agricultural Chain

Steel Agricultural Chain

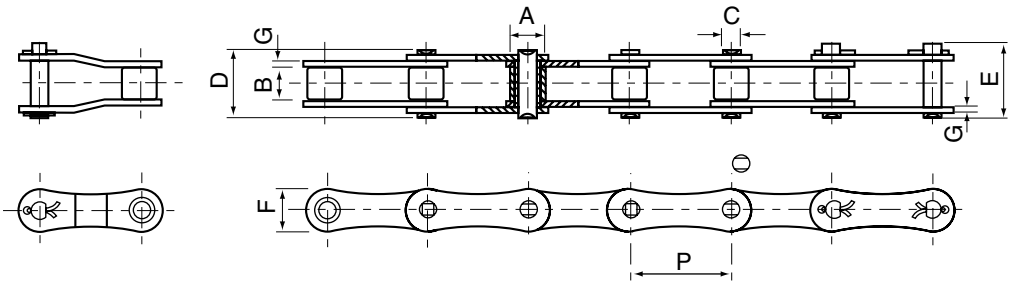

Chain number	Pitch P	Roller diameter A	Width between inner plates B	Pin diameter C	Pin length D	Pin length E	Side plate height F	Plate thick-ness G	Minimum tensile strength kN	Average tensile strength kN	Weight kg/m
S32	29.21	11.43	15.88	4.45	26.70	28.80	13.20	1.80	8.00	21.60	0.86
S42	34.93	14.27	19.05	7.00	34.30	37.00	19.80	2.80	27.00	50.80	1.60
S45	41.40	15.24	22.23	5.72	37.70	40.40	17.30	2.80	18.00	36.10	1.66
S52	38.10	15.24	22.23	5.72	37.70	40.40	17.30	2.80	18.00	36.10	1.68
S55	41.40	17.78	22.23	5.72	37.70	40.40	17.30	2.80	18.00	36.10	1.80
S55X	41.40	15.88	20.00	8.28	38.00	40.70	20.00	3.00	50.00	55.00	2.20
S55R	41.40	17.78	22.23	8.90	41.00	44.00	22.40	3.50	45.00	73.10	2.49
S62	41.91	19.05	25.40	5.72	40.30	43.00	17.30	2.50	27.00	36.10	1.87
S77	58.34	18.26	22.23	8.90	43.20	46.40	26.20	4.00	45.00	73.10	2.65
S88	66.27	22.86	28.58	8.90	49.80	53.00	26.20	4.00	45.00	73.10	3.25

Steel Agricultural Chain

Steel Agricultural Chain

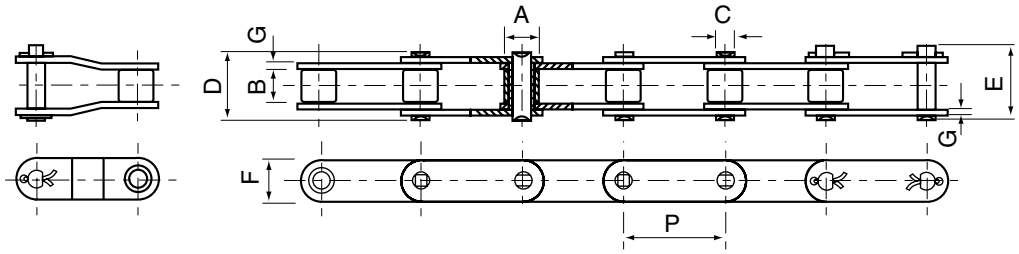

Chain number	Pitch P	Roller diameter A	Width between inner plates B	Pin diameter C	Pin length D	Pin length E	Side plate height F	Plate thick-ness G	Minimum tensile strength kN	Average tensile strength kN	Weight kg/m
38.4	38.400	15.88	19.05	6.92	33.80	37.00	17.30	2.50	25.00	33.00	1.65
38.4-V	38.400	15.88	18.00	6.92	33.80	37.00	17.30	3.00	31.50	40.00	1.74
38.4-VB	38.400	15.88	19.05	8.27	36.20	39.40	20.50	3.00	45.00	50.00	2.12
CA550	41.400	16.87	19.81	7.19	35.00	38.00	19.30	2.80	39.10	51.20	1.94
CA555	41.400	16.87	12.70	7.19	29.70	33.10	19.30	3.10	39.10	56.00	1.83
CA557	41.400	17.78	20.24	8.00	37.40	40.60	23.10	3.10	55.61	74.30	2.20
CA620	42.010	17.91	24.51	7.19	41.80	45.20	20.20	3.25	39.10	55.10	2.35
CA627	30.000	15.88	19.05	8.28	36.10	39.40	20.50	3.00	50.00	55.00	2.51
CA650	50.800	25.00	19.05	9.53	40.40	44.70	25.00	4.00	90.00	95.00	3.49
CA2060H	38.100	11.91	12.70	5.94	29.74	31.72	17.45	3.25	31.28	40.50	1.50

Every effort has been taken to ensure that the data listed in this catalogue is correct. Challenge accepts no liability for any inaccuracies or damage caused. All dimensions in millimetres unless otherwise stated.

Agricultural Chain Attachments

S Series A1 & K1 Attachments

Chain number	P	G	J	K	M	O	W
S32	29.21	1.80	21.50	30.50	8.60	5.30	6.90
S42	34.93	2.80	27.00	37.45	14.00	8.30	11.50
S45	41.40	2.80	27.00	37.50	11.40	8.50	11.70
S52	38.10	2.80	29.40	39.00	11.40	8.30	9.90
S55	41.40	2.80	27.00	37.50	11.40	8.50	11.70
S62	41.91	2.50	33.40	47.70	11.40	6.50	13.00
S77	58.34	4.00	38.10	50.80	20.80	8.40	11.70
S88	66.27	4.00	48.50	59.70	20.80	8.40	10.00

A1 = Attachment one side

K1 = Attachment both sides

Note:- Slotted holes

A1 & K1 Attachments

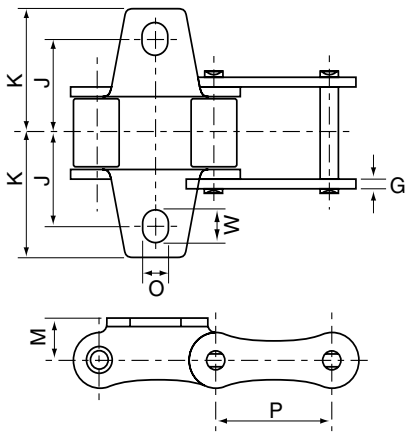

38.4 & CA Series A1 & K1 Attachments

Chain number	P	G	J	K	M	O	W	X
38.4	38.40	2.50	29.00	41.50	15.40	9.00		
38.4-V	38.40	3.00	28.75	41.00	15.40	9.00		
38.4-VB	38.40	3.00	29.00	43.50	14.00	10.50		
CA550	41.40	2.80	26.25	38.10	12.70	8.30	10.00	22.00
CA557	41.40	3.10	25.40	36.00	15.90	8.70		

A1 = Attachment one side

K1 = Attachment both sides

Note:- Slotted holes

A1 & K1 Attachments

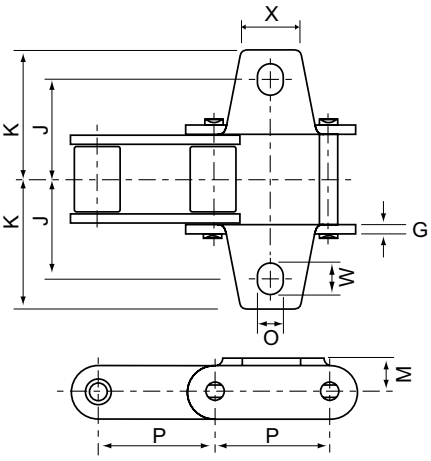

S, 38.4 & CA Series SD Attachment

Chain number	P	G	Q	J	K	H	X	O
S45	41.40	2.80	26.00	29.00	44.25	16.00	24.00	6.40
S55	41.40	2.80	26.00	29.00	44.25	16.00	24.00	6.40
38.4	38.40	2.50	37.00	26.00	35.50	24.00	38.40	8.40
38.4-V	38.40	3.00	37.00	26.00	35.50	24.00	38.40	8.40
38.4-VB	38.40	3.00	34.00	26.00	35.50	25.00	38.40	8.40
CA550	41.40	2.80	42.90	23.80	34.10	31.00	36.90	8.70

SD Attachments

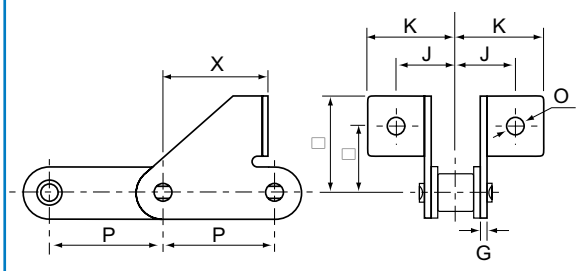

All dimensions in millimetres unless otherwise stated. Every effort has been taken to ensure that the data listed in this catalogue is correct. Challenge accepts no liability for any inaccuracies or damage caused.

Agricultural Chain Attachments

CA Series A1 Attachment

Chain number	P	G	J	K	M	O
CA620	42.01	3.25	34.58	45.40	14.35	10.30

A1 = Attachment one side

A1 Attachments

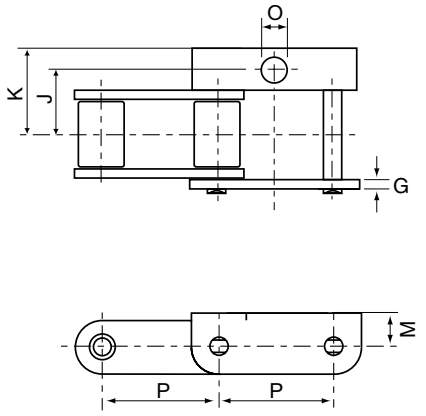

CA Series K25 Attachment

Chain number	P	G	J	K	M	O	W	X
CA550	41.40	2.80	50.80	35.70	12.70	8.70	10.00	22.23

A1 = Attachment one side
K1 = Attachment both sides
Note:- Slotted holes

K25 Attachment

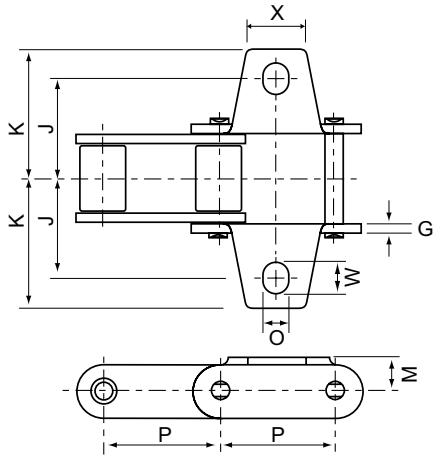

CA Series K39M Attachment

Chain number	P	G	I	J	K	M	O	W
CA550	41.40	2.80	30.0	50.80	72.00	12.70	9.90	13.00
CA557	41.40	3.10	38.1	53.94	76.20	14.60	9.90	13.00

NOTE:- Slotted holes

K39M Attachments

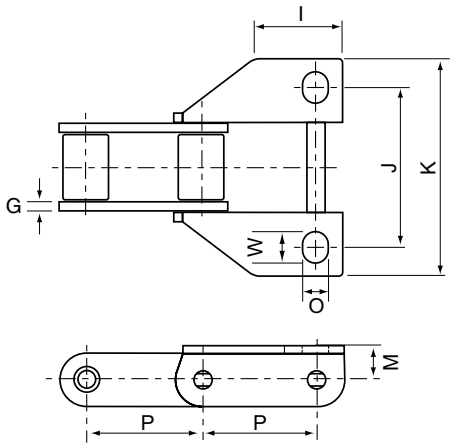

Every effort has been taken to ensure that the data listed in this catalogue is correct. Challenge accepts no liability for any inaccuracies or damage caused. All dimensions in millimetres unless otherwise stated.

Agricultural Chain Attachments

CA Series F14 Attachments

Chain number	P	G	J	K	M	O	W	E
CA550	41.40	2.80	31.75	79.40	101.60	8.33	15.90	20.24
CA557	41.40	3.10	31.75	79.40	109.80	8.60	15.88	19.60

F14/F17 Attachments

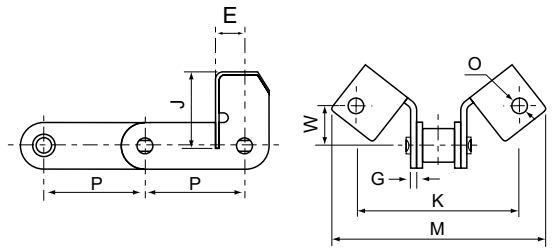

CA Series F17 Attachment

Chain number	P	G	J	K	M	O	W	E
CA550	41.40	2.80	40.89	114.30	143.70	9.91	20.57	23.68

CA Series AA3 Attachment

Chain number	P	G	J	K	M	H	O	S_1
CA557	41.40	3.10	31.90	43.29	30.20	31.06	8.20	9.73

AA3 Attachments

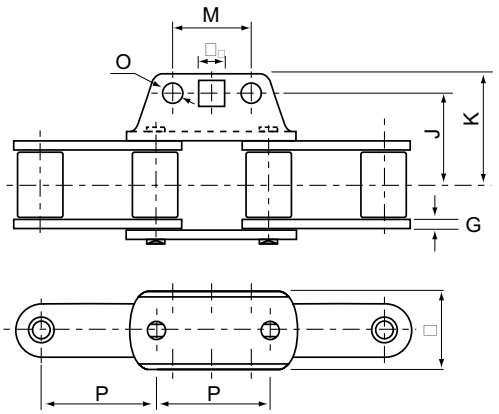

CA Series C6E Attachment

Chain number	P	G	C	J	K	α°
CA550	41.40	2.80	55.60	23.60	13.50	20.00
CA555	41.40	3.10	63.50	23.60	13.50	15.00
C2060H	38.10	3.25	63.50	-	-	22.50

C6E Attachments

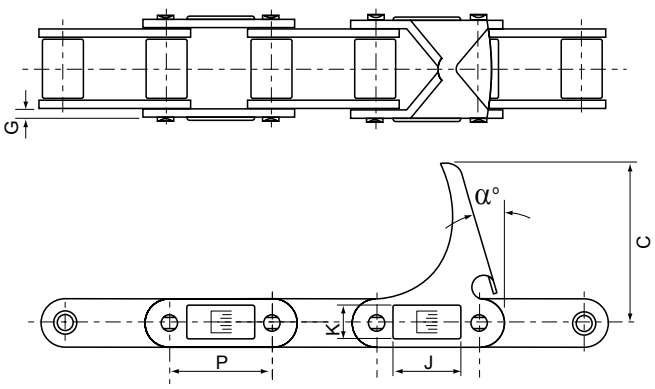

All dimensions in millimetres unless otherwise stated. Every effort has been taken to ensure that the data listed in this catalogue is correct. Challenge accepts no liability for any inaccuracies or damage caused.

Agricultural Chain Attachments

CA Series 6EJ Attachment

Chain number	P	G	C	J	K	α°
CA620	42.01	3.20	66.00	23.60	13.50	15.00

CEJ Attachment

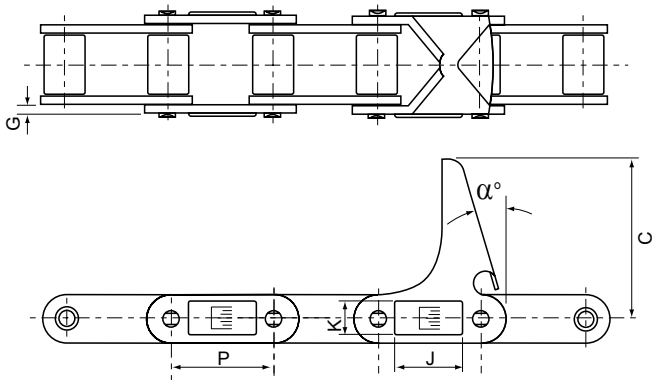

CA Series C5E Attachment

Chain number	P	G	C	α°
CA550	41.40	2.80	59.00	15.00
CA555	41.40	3.10	57.15	15.00

C5E Attachments

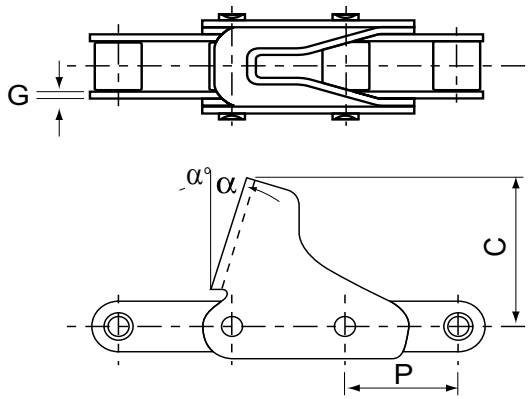

CA Series C11E Attachment

Chain number	P	G	C	J	K	α°
CA550	41.40	2.80	59.00	23.60	13.50	15.00

C11E Attachment

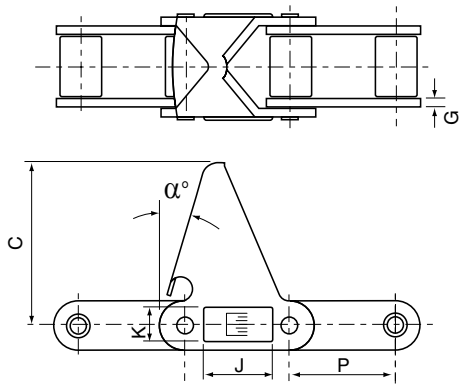

Every effort has been taken to ensure that the data listed in this catalogue is correct. Challenge accepts no liability for any inaccuracies or damage caused. All dimensions in millimetres unless otherwise stated.

Agricultural Chain Attachments

CA Series C12E Attachment

Chain number	P	G	C	α°
CA550	41.40	2.80	59.00	9.00

C12E Attachments

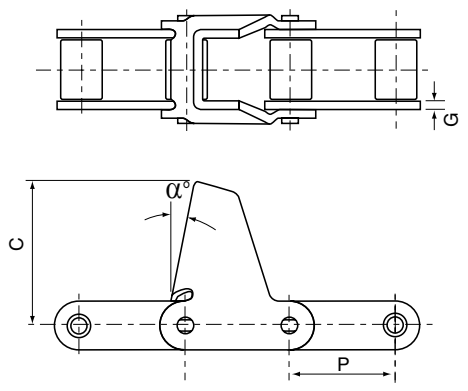

CA Series C13E Attachment

Chain number	P	G	C	J	K	α°
CA550	41.40	2.80	92.10	23.60	13.50	15.00

C13E Attachments

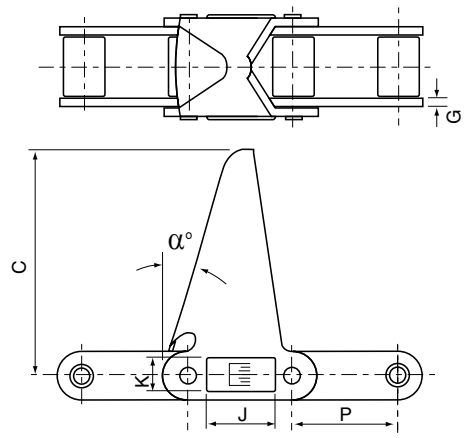

CA Series C17E Attachment

Chain number	P	G	C	J	K	α°
CA550	41.40	2.80	76.20	23.60	13.50	15.00

C17E Attachments

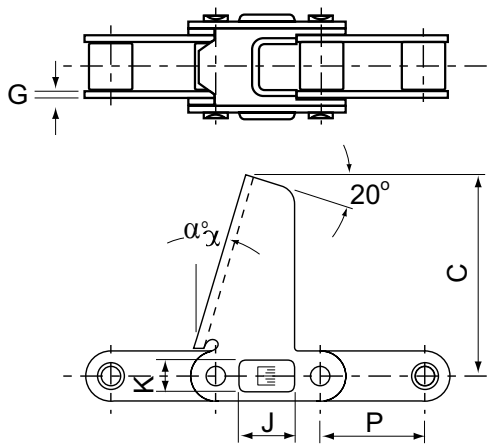

All dimensions in millimetres unless otherwise stated. Every effort has been taken to ensure that the data listed in this catalogue is correct. Challenge accepts no liability for any inaccuracies or damage caused.

Agricultural Chain Attachments

CA650F3 X L4

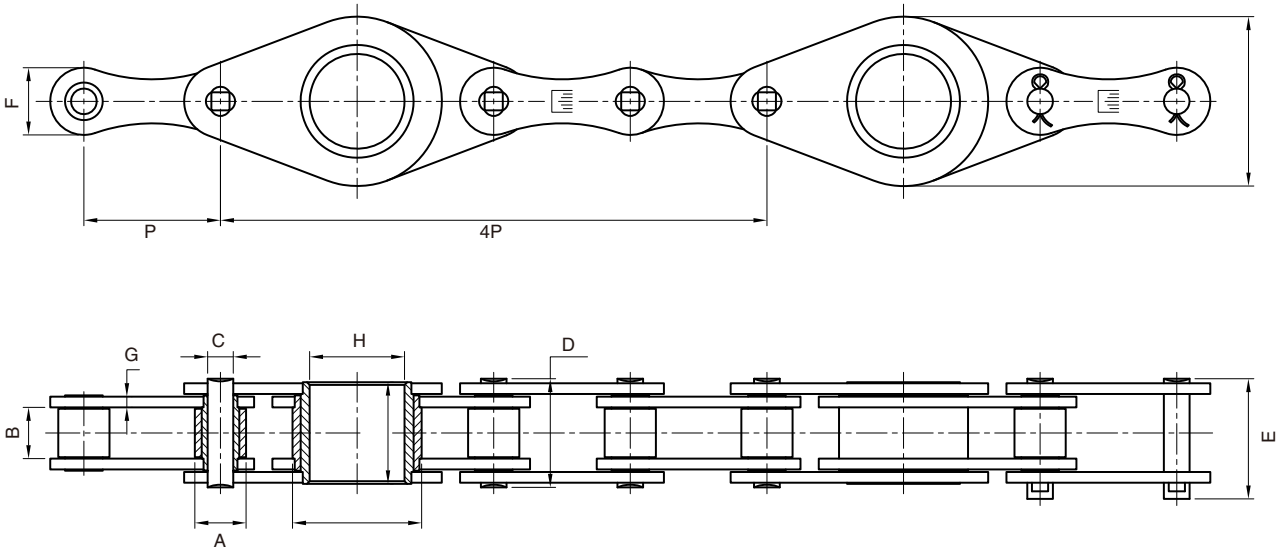

Model	Pitch P	Roller diameter A	Width between inner plates B	Pin diameter C	Pin length D	Pin length E	Side plate height F	Plate thick-ness G	Hollow pin inner diameter	Minimum tensile strength kN	Attach-ment spacing
CA650F3/L4	50.80	19.05	19.05	9.53	40.40	44.7	25.00	4.00	35.3	90.00	4P

CA650F3 X L6

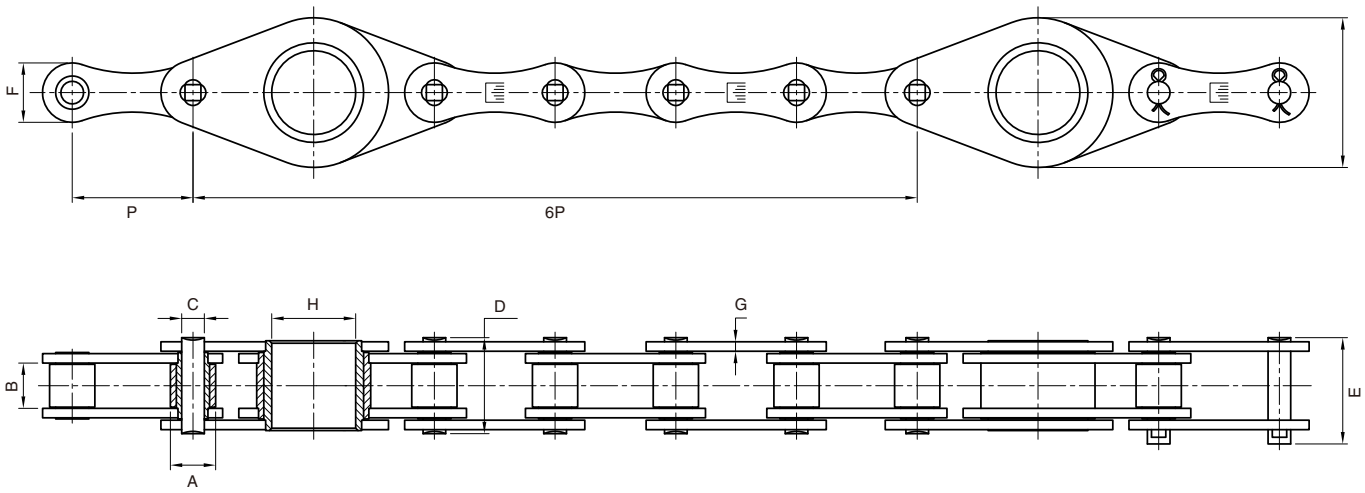

Model	Pitch P	Roller diameter A	Width between inner plates B	Pin diameter C	Pin length D	Pin length E	Side plate height F	Plate thick-ness G	Hollow pin inner diameter	Minimum tensile strength kN	Attach-ment spacing
CA650F3/L6	50.80	19.05	19.05	9.53	40.40	44.7	25.00	4.00	35.3	90.00	6P

Every effort has been taken to ensure that the data listed in this catalogue is correct. Challenge accepts no liability for any inaccuracies or damage caused. All dimensions in millimetres unless otherwise stated.

Agricultural Chain Attachments

"S" Type Roller Chains

"S" Type Roller Chains

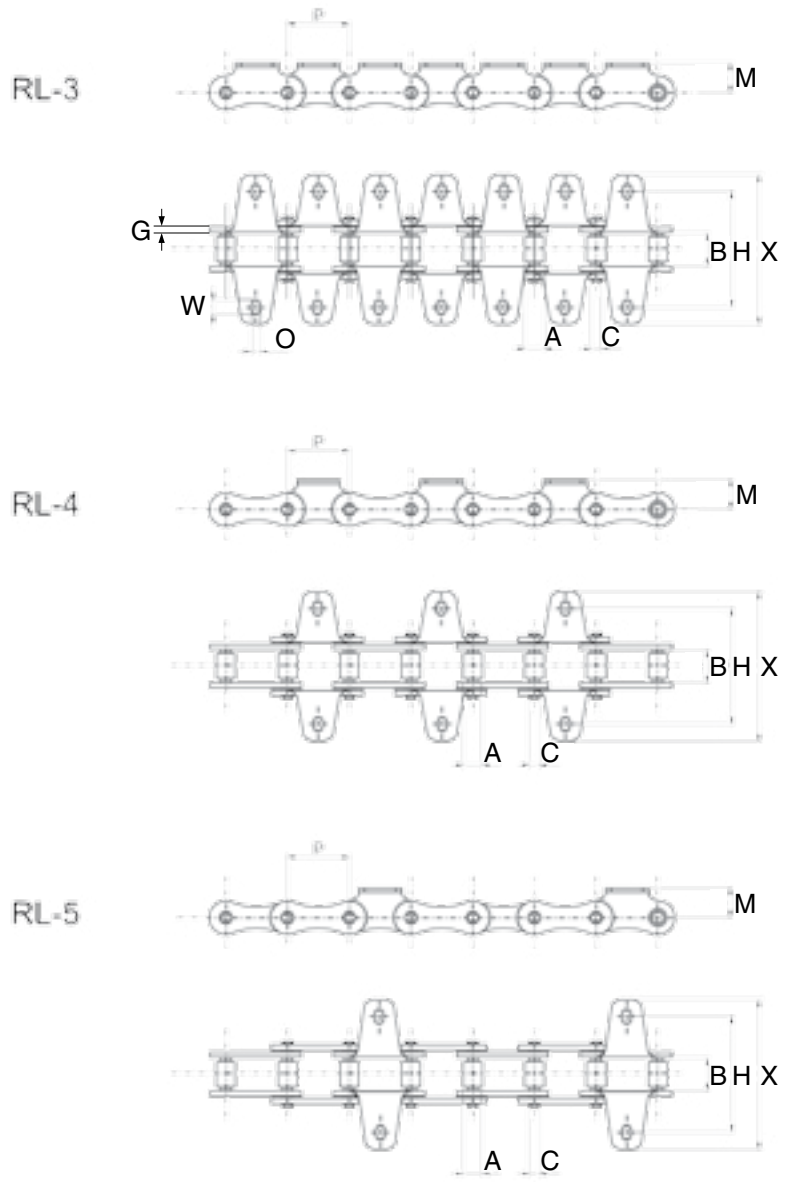

Chain number	Pitch	Roller diameter	Width between inner plates	Pin diameter	Side plate thickness	Attachment height					Average tensile strength
	P	A	B	C	G	H	X	M	O	W	kN
S55X/RL-3	41.40	15.88	20.00	8.28	3.00	52.00	79.40	17.00	8.30	10.00	55.00
S55X/RL-4	41.40	15.88	20.00	8.28	3.00	52.00	79.40	17.00	8.30	10.00	55.00
S55X/RL-5	41.40	15.88	20.00	8.28	3.00	52.00	79.40	17.00	8.30	10.00	55.00

All dimensions in millimetres unless otherwise stated.

Every effort has been taken to ensure that the data listed in this catalogue is correct. Challenge accepts no liability for any inaccuracies or damage caused.

Agricultural Chain Attachments

"S" Type Roller Chains

"S" Type Roller Chains

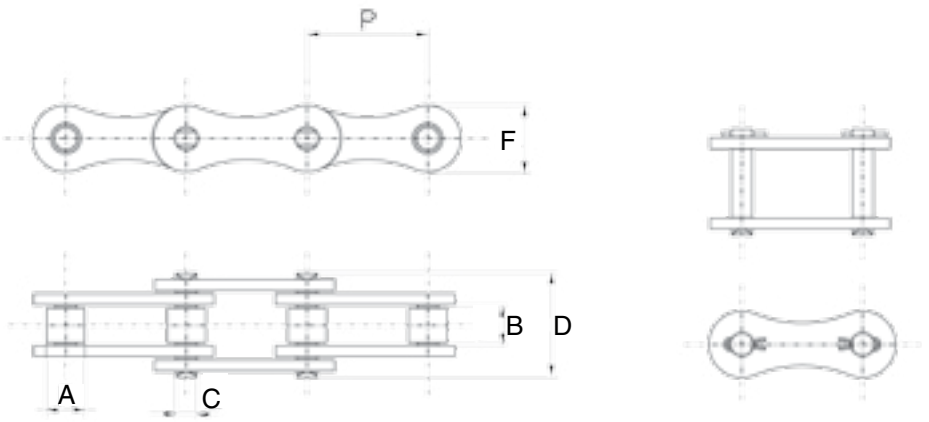

Chain	Pitch	Roller diameter	Width between inner plates	Pin diameter	Side plate height	Pin length	Average tensile strength
	P	A	B	C	F	D	kN
S55X/TM-1	41.40	15.88	20.00	8.28	20.00	38.00	55.00

"S" Type Roller Chains

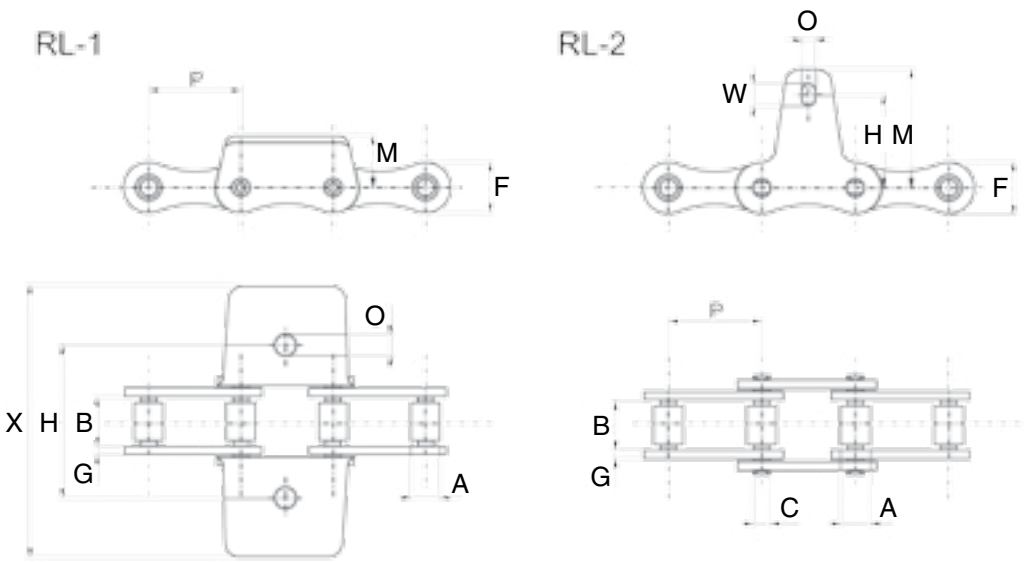

Chain	Pitch	Roller diameter	Width between inner plates	Pin diameter	Side plate height	Side plate thickness	Attachment height					Average tensile strength
	P	A	B	C	F	G	H	X	M	O	W	kN
S55X RL-1	41.40	15.88	20.00	8.28	20.00	3.00	52.00	90.00	17.00	8.30	-	55.00
S55X RL-2	41.40	15.88	20.00	8.28	20.00	3.00	23.70	-	34.40	8.30	10.00	55.00

Every effort has been taken to ensure that the data listed in this catalogue is correct. Challenge accepts no liability for any inaccuracies or damage caused. All dimensions in millimetres unless otherwise stated.

Agricultural Chain Attachments

Chains with RM Attachment

Chains with RM Attachments

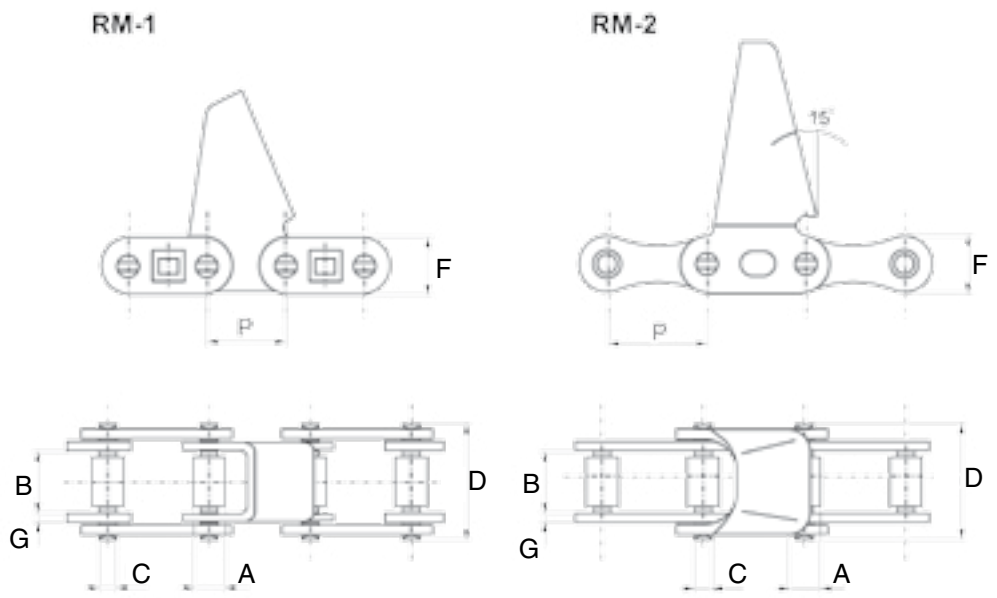

Model	Pitch	Roller diameter	Width between inner plates	Pin diameter	Pin length	Side plate height	Plate thickness	Minimum tensile strength
	P	A	B	C	D	F	G	kN
RM1	30.00	15.88	20.00	8.28	35.80	20.70	3.00	40.00
RM2	30.00	15.88	20.00	8.28	38.00	20.00	3.00	40.00

All dimensions in millimetres unless otherwise stated. Every effort has been taken to ensure that the data listed in this catalogue is correct. Challenge accepts no liability for any inaccuracies or damage caused.

Note

Every effort has been taken to ensure that the data listed in this catalogue is correct. Challenge accepts no liability for any inaccuracies or damage caused. All dimensions in millimetres unless otherwise stated.

Conveyor Chains

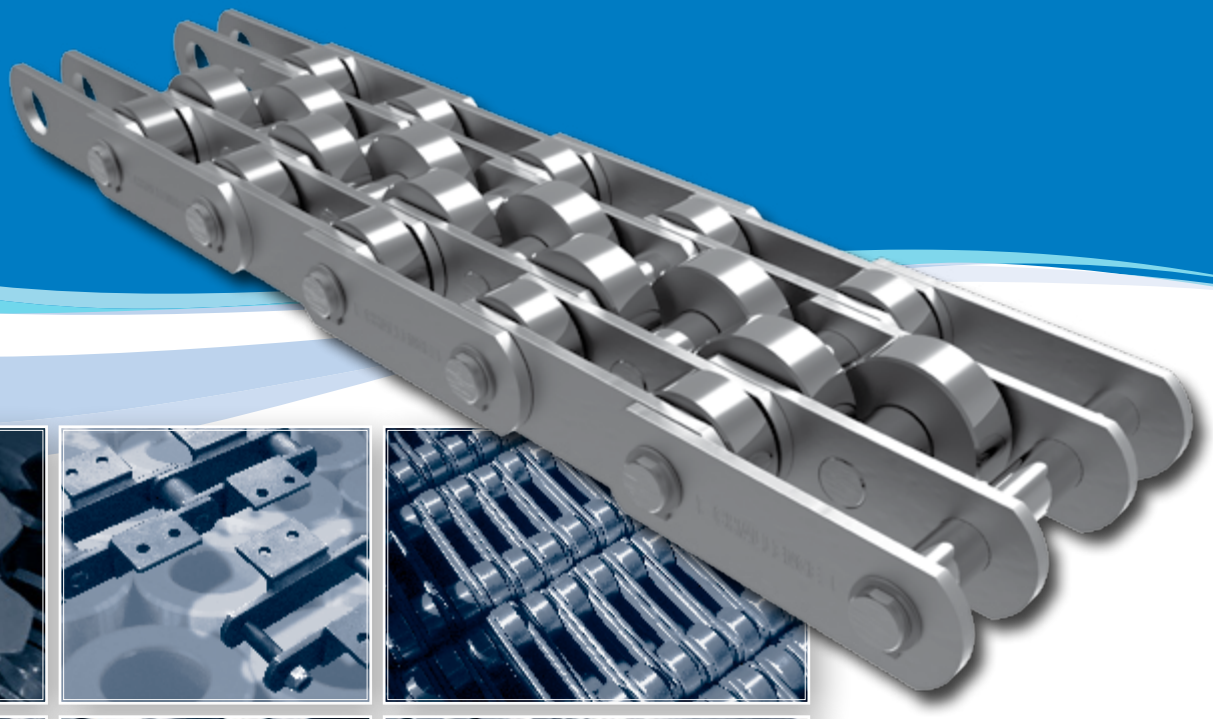

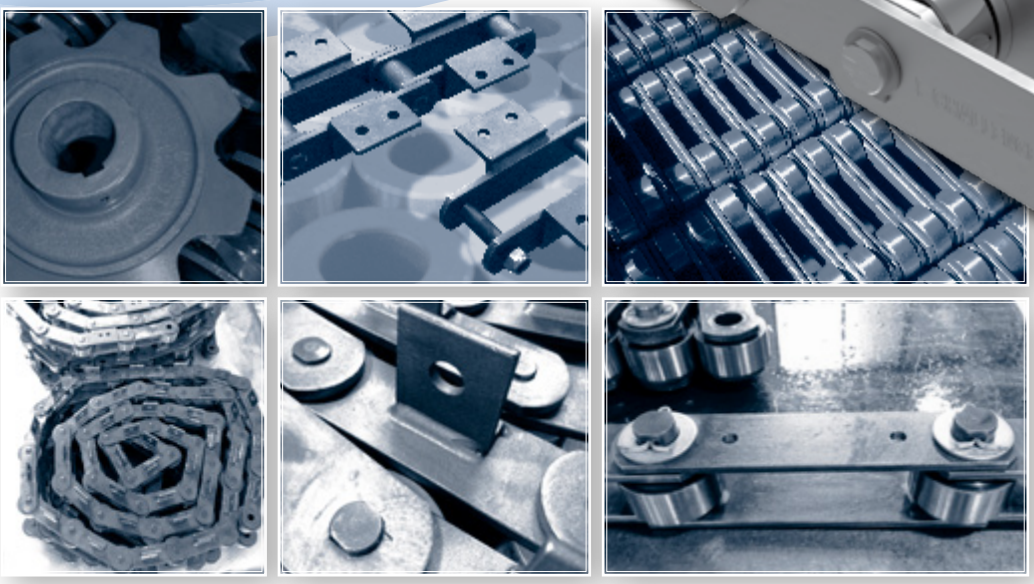

Here's a Challenge:

European-quality Conveyor chains manufactured in our dedicated plant in the industrialised east coast of China supplying a global market.

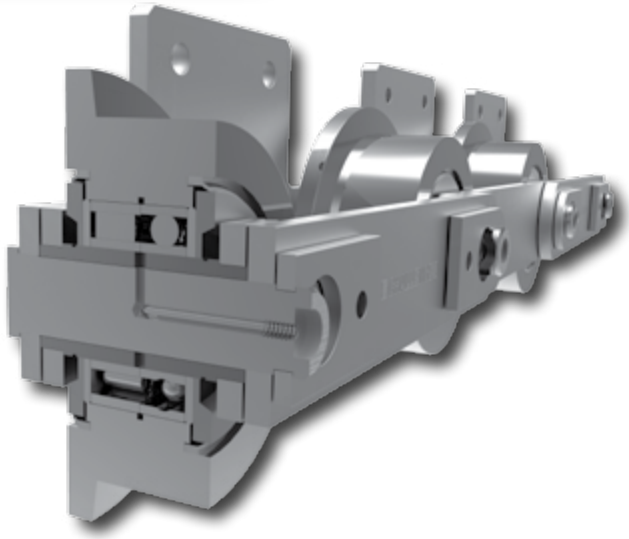

- Specialists in the production of spin riveted chains
- High grade induction hardened alloy steel pins
- State-of-the-art European machines giving the best rivet on any standard chain

Conveyor Chain

The Benefits of Challenge Spin Riveted Conveyor Chain

- **Material** – High quality steels used throughout

- **Link plates cropped from high carbon cold drawn steel**

  To avoid internal stresses associated with guillotined steel, Challenge produces all plates from high tolerance, on size, cold drawn steel bars resulting in a plate better able to withstand fatigue and shock loads.

- **Bushes with location shoulders and interference fit**

  For precise assembly; control on inner width and prevention of bush rotation. Bush shoulder length extended to form clearance between inner and outer plates and provide uniform lubrication; increased strength and life. This reduces the possibility of chain seizure.

- **Case Hardened Alloy steel bushes precision machined from seamless tube**

  Ensuring minimum distortion and superior concentricity.

- **Optional Stainless Steel or Nitride treated liner bushes**

- **Hardened Rollers with grinding**

  Grinding the outer diameter gives excellent wear resistance and good load carrying qualities plus reduced wear on sprockets and better visual result.

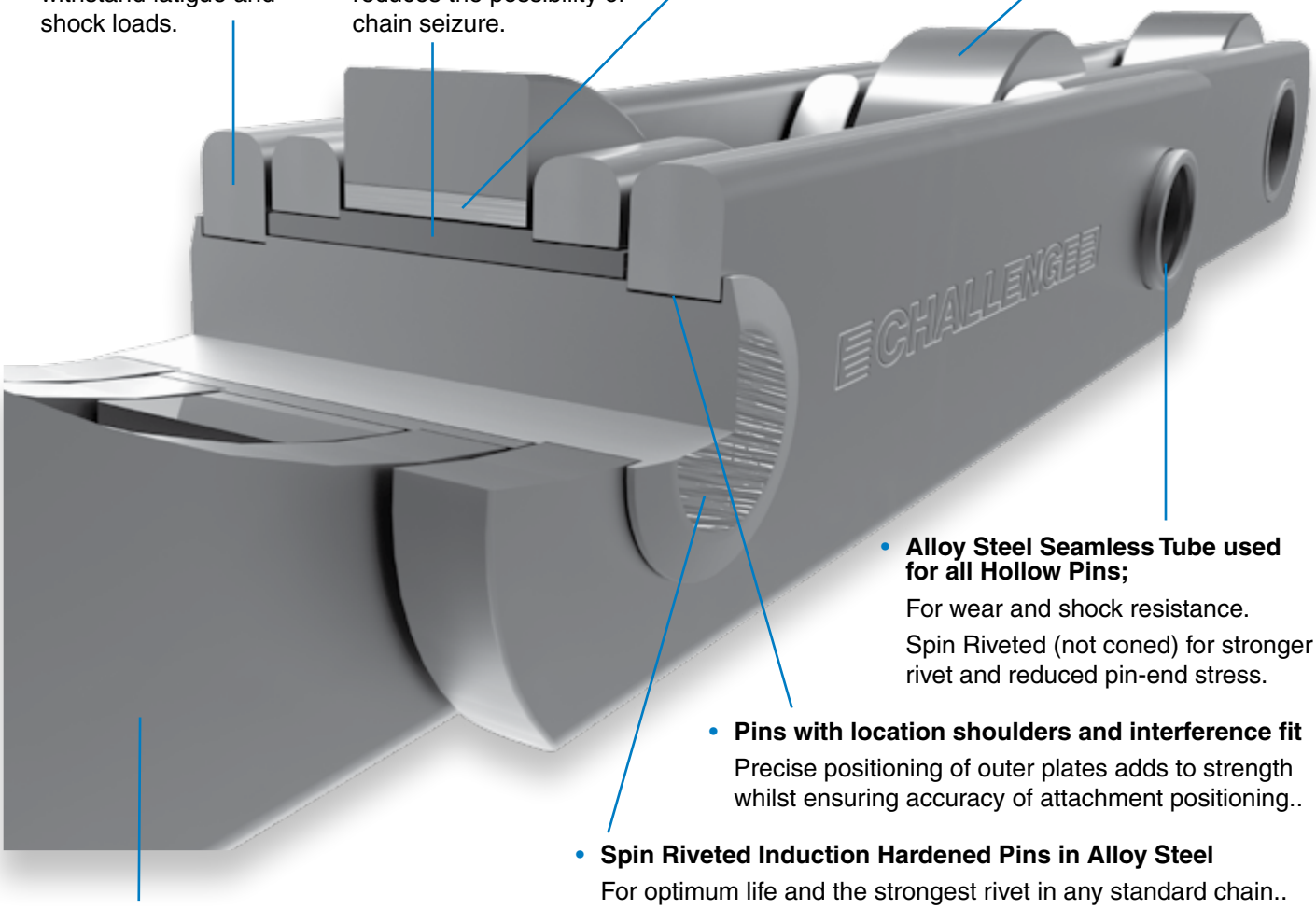

- **Alloy Steel Seamless Tube used for all Hollow Pins;**

  For wear and shock resistance.

  Spin Riveted (not coned) for stronger rivet and reduced pin-end stress.

- **Pins with location shoulders and interference fit**

  Precise positioning of outer plates adds to strength whilst ensuring accuracy of attachment positioning..

- **Spin Riveted Induction Hardened Pins in Alloy Steel**

  For optimum life and the strongest rivet in any standard chain..

- **Shot peened to produce a strong surface and reduce fatigue**

- **Holes precision punched on dedicated progression tooling**

  Guarantees consistently high tolerance pitch control and strong, fatigue resistant chain.

- **Challenge has invested heavily in CNC controlled machinery for optimum batch component conformity.**

- **Attachment and options**

  CNC welded and integral attachments, special bushes, bearings. Zinc and Nickel plated parts, molykoted pins, bushes, and rollers. Plastic rollers, flanged rollers, hardened plates, stainless parts, liner bushes etc. All specials produced in highest quality - fast turnaround.

- **Attachment plates jig assembled maintains position and squareness.**

Every effort has been taken to ensure that the data listed in this catalogue is correct. Challenge accepts no liability for any inaccuracies or damage caused.

Conveyor Chain

Z Series

BS Conveyor Chain (BS 4116 Part 4)

Z Series Solid Pin

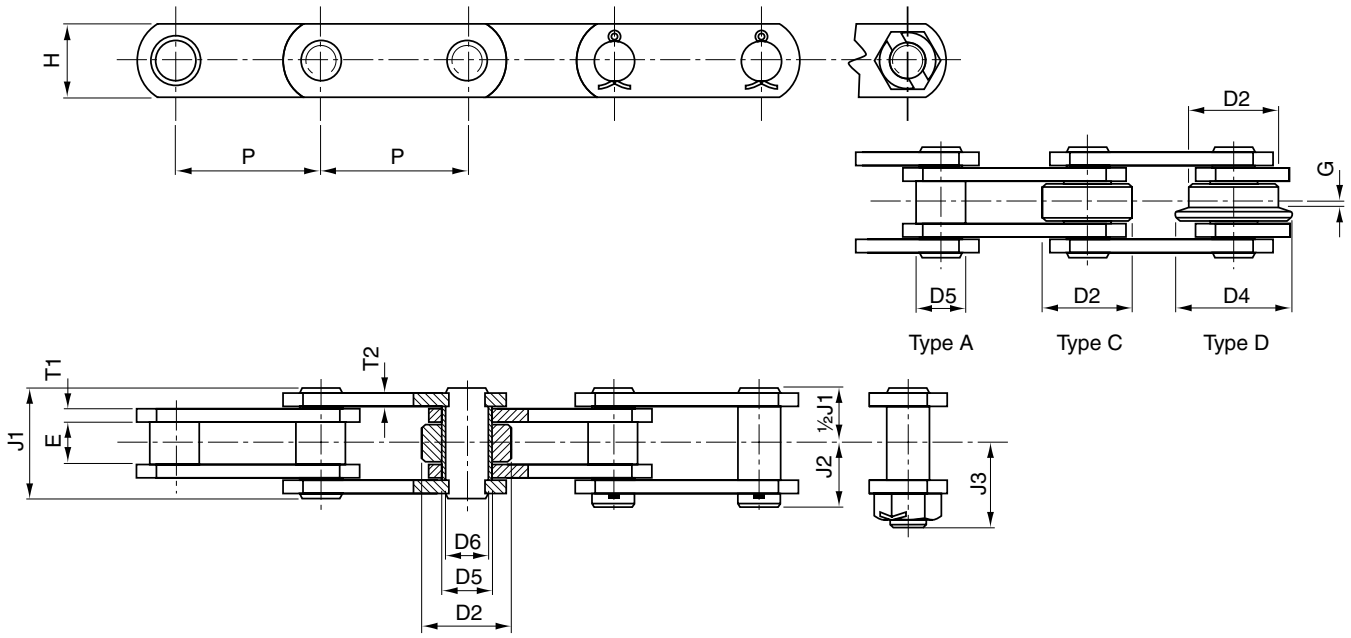

Solid Pin

Chain number	Minimum Breaking Load, lbf	Pitch Inches P	Pitch mm P	E	H	T1	T2	J1	J2	J3	D2	D4	D5	D6	G	Breaking Load kN	HT Breaking Load, kN	Weight (Type C) kg/m
Z40	7500	2.0	50.8	15.2	25.4	3.8	3.8	39.5	22	29	31.75	40	19	14	2.5	40	50	4
"	"	2.5	63.5	"	"	"	"	"	"	"	"	"	"	"	"	"	"	3.5
"	"	3.0	76.2	"	"	"	"	"	"	"	"	"	"	"	"	"	"	3.2
"	"	3.5	88.9	"	"	"	"	"	"	"	"	"	"	"	"	"	"	3
"	"	4.0	101.6	"	"	"	"	"	"	"	"	"	"	"	"	"	"	2.8
"	"	5.0	127.0	"	"	"	"	"	"	"	"	"	"	"	"	"	"	2.6
"	"	6.0	152.4	"	"	"	"	"	"	"	"	"	"	"	"	"	"	2.4
Z100	15000	3.0	76.2	19	38.1	5.1	3.8	46	28	38	47.63	60	25.4	19	3.5	100	130	7.7
"	"	3.5	88.9	"	"	"	"	"	"	"	"	"	"	"	"	"	"	7
"	"	4.0	101.6	"	"	"	"	"	"	"	"	"	"	"	"	"	"	6.5
"	"	5.0	127.0	"	"	"	"	"	"	"	"	"	"	"	"	"	"	5.8
"	"	6.0	152.4	"	"	"	"	"	"	"	"	"	"	"	"	"	"	5.3
"	"	7.0	177.8	"	"	"	"	"	"	"	"	"	"	"	"	"	"	5
"	"	8.0	203.2	"	"	"	"	"	"	"	"	"	"	"	"	"	"	4.7
Z160	30000	4.0	101.6	25.4	50.8	7.1	5.1	59	34.5	49	66.7	82	34.9	26.97	3.5	156	200	14.3
"	"	5.0	127.0	"	"	"	"	"	"	"	"	"	"	"	"	"	"	12.5
"	"	6.0	152.4	"	"	"	"	"	"	"	"	"	"	"	"	"	"	11.3
"	"	7.0	177.8	"	"	"	"	"	"	"	"	"	"	"	"	"	"	10.5
"	"	8.0	203.2	"	"	"	"	"	"	"	"	"	"	"	"	"	"	9.8
"	"	9.0	228.6	"	"	"	"	"	"	"	"	"	"	"	"	"	"	9.3
"	"	10.0	254.0	"	"	"	"	"	"	"	"	"	"	"	"	"	"	9
Z300	45000	6.0	152.4	38	65	10	8	82.5	47	65	88.9	107.9	41.3	31.75	8.5	300	380	24.3
"	"	7.0	177.8	"	"	"	"	"	"	"	"	"	"	"	"	"	"	22
"	"	8.0	203.2	"	"	"	"	"	"	"	"	"	"	"	"	"	"	21
"	"	10.0	254.0	"	"	"	"	"	"	"	"	"	"	"	"	"	"	18
"	"	12.0	304.8	"	"	"	"	"	"	"	"	"	"	"	"	"	"	16.5

All dimensions in millimetres unless otherwise stated.

Every effort has been taken to ensure that the data listed in this catalogue is correct. Challenge accepts no liability for any inaccuracies or damage caused.

Conveyor Chain

ZC Series

BS Conveyor Chain (BS 4116 Part

ZC Series Hollow Pin

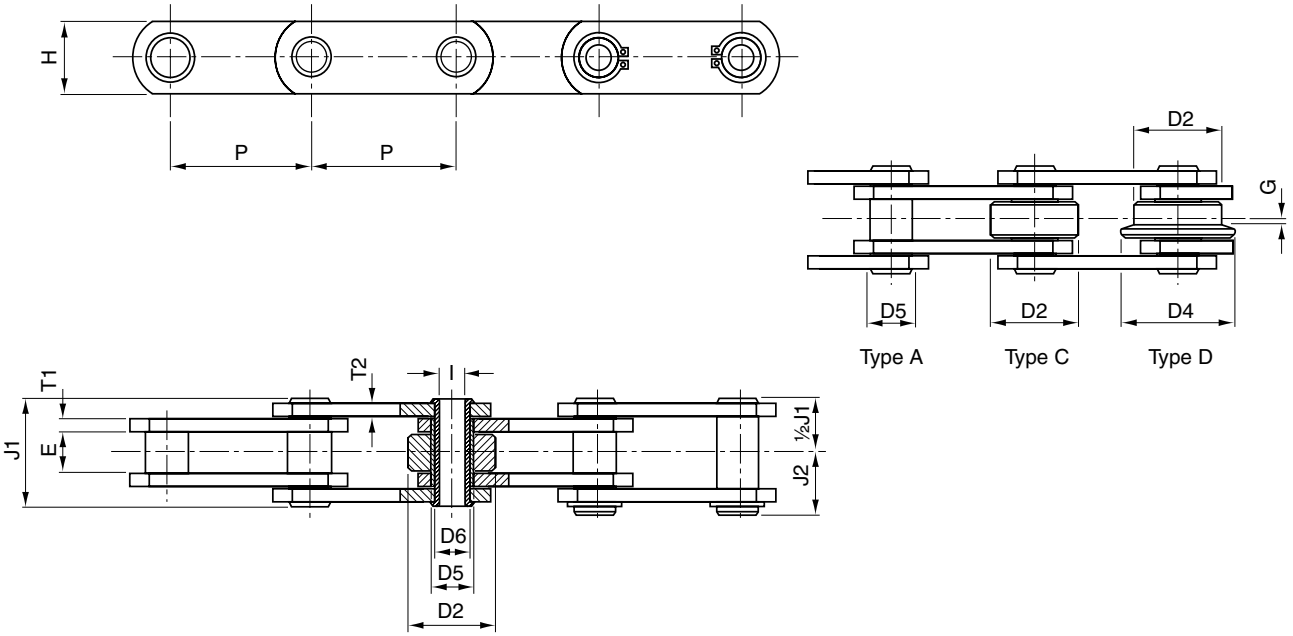

Hollow Pin

Chain number	Minimum Breaking Load, lbf	Pitch Inches P	Pitch mm P	E	I	H	T1	T2	J1	J2	D2	D4	D5	D6	G	Breaking Load kN	HT Breaking Load, kN	Weight (Type C) kg/m
ZC21	4500	1.5	38.1	12.7	6.5	18	2.5	2.5	26	14.5	25.4	/	11	9	/	21	/	2.2
"	"	2.0	50.8	"	"	"	"	"	"	"	"	"	"	"	"	"	"	1.7
"	"	2.5	63.5	"	"	"	"	"	"	"	"	"	"	"	"	"	"	1.6
"	"	3.0	76.2	"	"	"	"	"	"	"	"	"	"	"	"	"	"	1.4
ZC40	6000	2.0	50.8	15.2	10.3	25.4	3.8	3.8	37.2	21.5	31.75	40	19	14	2.5	40	50	3.6
"	"	2.5	63.5	"	"	"	"	"	"	"	"	"	"	"	"	"	"	3.2
"	"	3.0	76.2	"	"	"	"	"	"	"	"	"	"	"	"	"	"	3.0
"	"	3.5	88.9	"	"	"	"	"	"	"	"	"	"	"	"	"	"	2.8
"	"	4.0	101.6	"	"	"	"	"	"	"	"	"	"	"	"	"	"	2.6
"	"	5.0	127.0	"	"	"	"	"	"	"	"	"	"	"	"	"	"	2.4
"	"	6.0	152.4	"	"	"	"	"	"	"	"	"	"	"	"	"	"	2.3
ZC60	12000	3.0	76.2	19	13.2	38.1	5.1	3.8	44	24.5	47.63	60	25.4	19	3.5	60	120	7.0
"	"	3.5	88.9	"	"	"	"	"	"	"	"	"	"	"	"	"	"	6.4
"	"	4.0	101.6	"	"	"	"	"	"	"	"	"	"	"	"	"	"	6.0
"	"	5.0	127.0	"	"	"	"	"	"	"	"	"	"	"	"	"	"	5.3
"	"	6.0	152.4	"	"	"	"	"	"	"	"	"	"	"	"	"	"	4.9
"	"	7.0	177.8	"	"	"	"	"	"	"	"	"	"	"	"	"	"	4.6
"	"	8.0	203.2	"	"	"	"	"	"	"	"	"	"	"	"	"	"	4.4
ZC150	24000	4.0	101.6	25.4	19.6	50.8	7.1	5.1	57	32	66.7	82	34.9	26.97	3.5	150	190	12.8
"	"	5.0	127.0	"	"	"	"	"	"	"	"	"	"	"	"	"	"	11.3
"	"	6.0	152.4	"	"	"	"	"	"	"	"	"	"	"	"	"	"	11.0
"	"	7.0	177.8	"	"	"	"	"	"	"	"	"	"	"	"	"	"	9.5
"	"	8.0	203.2	"	"	"	"	"	"	"	"	"	"	"	"	"	"	9.0
"	"	9.0	228.6	"	"	"	"	"	"	"	"	"	"	"	"	"	"	8.6
"	"	10.0	254.0	"	"	"	"	"	"	"	"	"	"	"	"	"	"	8.2
ZC300	36000	6.0	152.4	38	23	65	10	8	83	44	88.9	107.9	41.3	31.75	8.5	300	380	22.3
"	"	7.0	177.8	"	"	"	"	"	"	"	"	"	"	"	"	"	"	20.2
"	"	8.0	203.2	"	"	"	"	"	"	"	"	"	"	"	"	"	"	18.8
"	"	10.0	254.0	"	"	"	"	"	"	"	"	"	"	"	"	"	"	16.4
"	"	12.0	304.8	"	"	"	"	"	"	"	"	"	"	"	"	"	"	15.2

Every effort has been taken to ensure that the data listed in this catalogue is correct. Challenge accepts no liability for any inaccuracies or damage caused. All dimensions in millimetres unless otherwise stated.

Conveyor Chain Attachments

Z/ZC Series Attachments

BS Conveyor Chain (BS 4116 Part 4)

Z/ZC Series Attachments

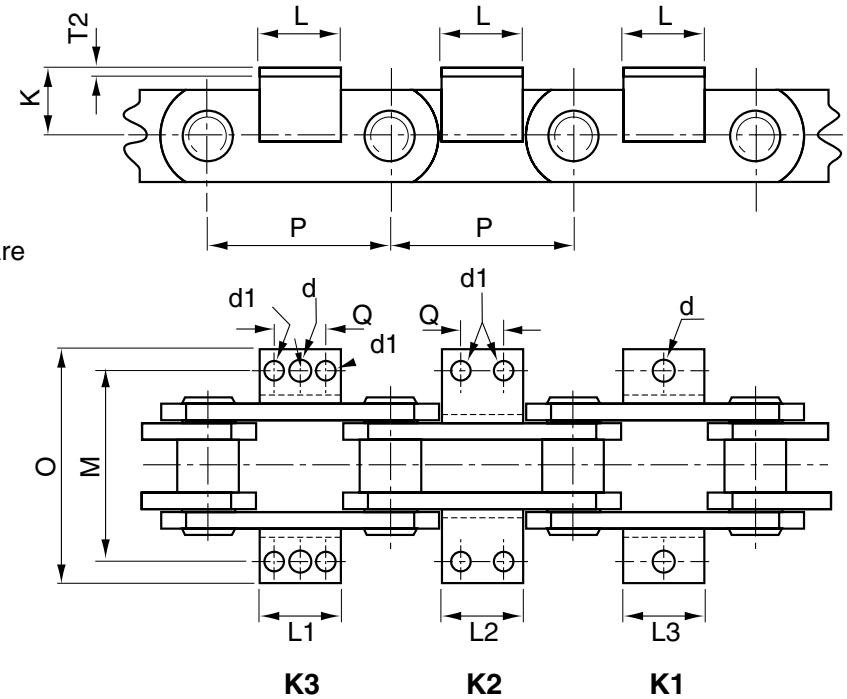

Note: Attachments are also available in A1, A2 and A3 (1, 2 and 3 hole, one side only) configuration

Conveyor Attachments

Chain Number	Minimum Breaking Load lbf	Pitch Inches P	Pitch mm P	Attachment Type	K	M	L1	L2	L3	d	d1	O	Q	Average Weight (Each) kg
ZC40/Z40	6000/7500	2.0	50.8	K1	19	76.2	19.0	-	-	10.6	-	129	-	0.10
"	"	2.5	63.5	"	"	"	19.0	-	-	"	-	112	-	0.10
"	"	3.0	76.2	"	"	"	28.0	-	-	"	-	136	-	0.10
"	"	3.5	88.9	"	"	"	28.0	-	-	"	-	112	-	0.10
"	"	4.0	101.6	K1,K2,K3	"	"	56.0	56.0	64.0	"	9.2	110	31.8	0.10
"	"	5.0	127.0	"	"	"	56.0	56.0	85.0	"	"	112	31.8	0.20
"	"	6.0	152.4	"	"	"	83.8	83.8	88.0	"	"	112	57.2	0.20
ZC100/Z100	12000/15000	3.0	76.2	K1	31.8	88.9	35.0	-	-	14	-	130	-	0.12
"	"	3.5	88.9	"	"	"	35.0	-	-	"	-	"	-	0.12
"	"	4.0	101.6	K1,K2,K3	"	"	35.0	56.0	64.0	"	11	"	31.8	0.10
"	"	5.0	127.0	"	"	"	56.0	56.0	64.0	"	"	"	31.8	0.30
"	"	6.0	152.4	"	"	"	56.0	84.0	90.0	"	"	"	57.2	0.32
"	"	7.0	177.8	"	"	"	56.0	127.0	130.0	"	"	"	89	0.40
"	"	8.0	203.2	"	"	"	56.0	127.0	130.0	"	"	"	89	0.40
ZC160/Z160	24000/30000	5.0	127.0	K1,K2	38.1	108	56.0	56.0	-	-	12.7	-	31.7	0.30
"	"	6.0	152.4	"	"	7.1	"	84.0	-	-	"	154	57.2	0.38
"	"	7.0	177.8	"	"	7.1	"	108.0	-	-	"	"	69.85	0.38
"	"	8.0	203.2	"	"	7.1	"	127.0	-	-	"	"	88.9	0.60
"	"	9.0	228.6	"	"	7.1	"	168.0	-	-	"	"	133.35	0.69
"	"	10.0	254.0	"	"	7.1	"	168.0	-	-	"	"	133.35	0.75
ZC300/Z300	36000/45000	6.0	152.4	K1	65	10	70.0			17.0	/	200	38.1	0.50
"	"	7.0	177.8	"	"	"	70.0			"	/	"	38.1	0.50
"	"	8.0	203.2	K1,K2	"	"	100.0			"	14	"	76.2	0.70
"	"	10.0	254.0	"	"	"	152.4			"	"	"	90	0.90
"	"	12.0	304.8	"	"	"	225.0			"	"	"	190	1.60
Z300/60	60000	6.0	152.4	K1	65	10	70.0			17.0	/	200	38.1	0.50
"	"	7.0	177.8	"	"	"	70.0			"	/	"	38.1	0.50
"	"	8.0	203.2	K1,K2	"	"	100.0			"	14	"	76.2	0.70
"	"	10.0	254.0	"	"	"	152.4			"	"	"	90	0.90
"	"	12.0	304.8	"	"	"	225.0			"	"	"	190	1.60

All dimensions in millimetres unless otherwise stated.

Every effort has been taken to ensure that the data listed in this catalogue is correct. Challenge accepts no liability for any inaccuracies or damage caused.

Conveyor Chain

ZE Series

BS Conveyor Chain (BS 4116 Part 4)

ZE Series Deep Link

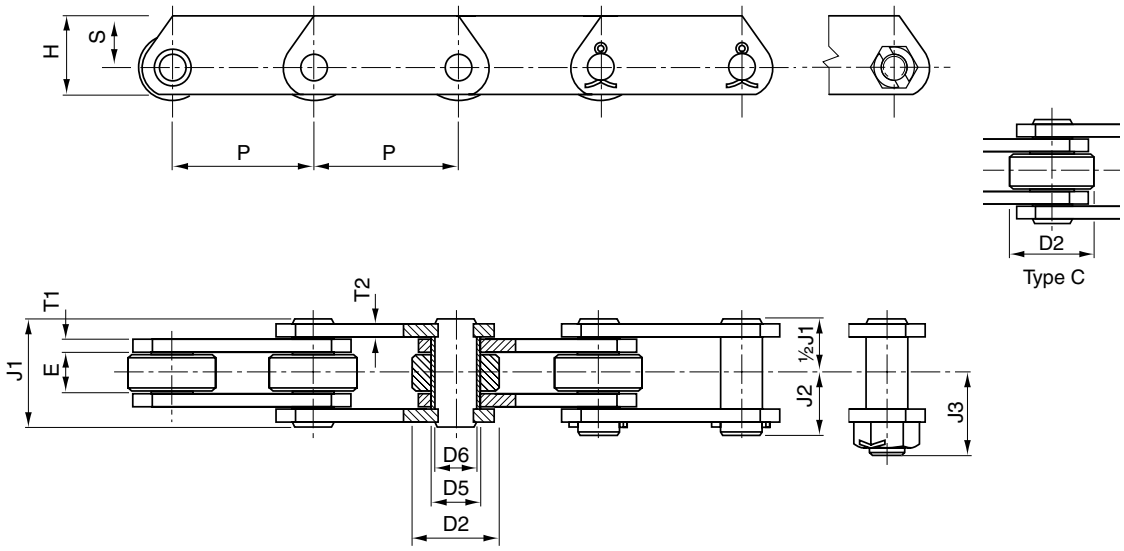

Deep Link

Chain Number	Minimum Breaking Load, lbf	Pitch Inches P	Pitch mm P	E	H	S	T1	T2	J1	J2	J3	D2	D5	D6	Breaking Load kN	HT Breaking Load, kN	Weight (Type C) kg/m
ZE40	7500	2.0	50.8	15.2	38.1	25.4	3.8	3.8	39.5	22	29	31.75	19	14	40	60	5.0
"	"	2.5	63.5	"	"	"	"	"	"	"	"	"	"	"	"	"	4.6
"	"	3.0	76.2	"	"	"	"	"	"	"	"	"	"	"	"	"	4.2
"	"	3.5	88.9	"	"	"	"	"	"	"	"	"	"	"	"	"	4.0
"	"	4.0	101.6	"	"	"	"	"	"	"	"	"	"	"	"	"	3.8
"	"	5.0	127.0	"	"	"	"	"	"	"	"	"	"	"	"	"	3.5
"	"	6.0	152.4	"	"	"	"	"	"	"	"	"	"	"	"	"	3.3
ZE100	15000	3.0	76.2	19	50.8	30	5.1	5.1	46	28	38	47.63	25.4	19	100	160	8.9
"	"	3.5	88.9	"	"	"	"	"	"	"	"	"	"	"	"	"	8.4
"	"	4.0	101.6	"	"	"	"	"	"	"	"	"	"	"	"	"	7.6
"	"	5.0	127.0	"	"	"	"	"	"	"	"	"	"	"	"	"	6.8
"	"	6.0	152.4	"	"	"	"	"	"	"	"	"	"	"	"	"	6.3
"	"	7.0	177.8	"	"	"	"	"	"	"	"	"	"	"	"	"	5.9
"	"	8.0	203.2	"	"	"	"	"	"	"	"	"	"	"	"	"	5.7
ZE160	30000	4.0	101.6	25.4	70	45	7.1	5.1	59	34.5	49	66.7	34.9	26.97	156	200	17.5
"	"	5.0	127.0	"	"	"	"	"	"	"	"	"	"	"	"	"	15.4
"	"	6.0	152.4	"	"	"	"	"	"	"	"	"	"	"	"	"	13.8
"	"	7.0	177.8	"	"	"	"	"	"	"	"	"	"	"	"	"	12.8
"	"	8.0	203.2	"	"	"	"	"	"	"	"	"	"	"	"	"	12.0
"	"	9.0	228.6	"	"	"	"	"	"	"	"	"	"	"	"	"	11.3
"	"	10.0	254.0	"	"	"	"	"	"	"	"	"	"	"	"	"	10.5
ZE300	45000	6.0	152.4	38	90	60	10	8	82.5	47	65	88.9	41.3	31.75	300	380	32.0
"	"	7.0	177.8	"	"	"	"	"	"	"	"	"	"	"	"	"	29.5
"	"	8.0	203.2	"	"	"	"	"	"	"	"	"	"	"	"	"	27.0
"	"	10.0	254.0	"	"	"	"	"	"	"	"	"	"	"	"	"	24.5
"	"	12.0	304.8	"	"	"	"	"	"	"	"	"	"	"	"	"	23.0
ZE300/60	60000	6.0	152.4	38	90	60	10	8	84	52	71	88.9	41.3	31.75	300	380	32.0
"	"	7.0	177.8	"	"	"	"	"	"	"	"	"	"	"	"	"	29.5
"	"	8.0	203.2	"	"	"	"	"	"	"	"	"	"	"	"	"	27.0
"	"	10.0	254.0	"	"	"	"	"	"	"	"	"	"	"	"	"	24.5
"	"	12.0	304.8	"	"	"	"	"	"	"	"	"	"	"	"	"	23.0

Every effort has been taken to ensure that the data listed in this catalogue is correct. Challenge accepts no liability for any inaccuracies or damage caused. All dimensions in millimetres unless otherwise stated.

Conveyor Chain

M Series

Metric Conveyor Chain (DIN 8167)

M Series Solid Pin

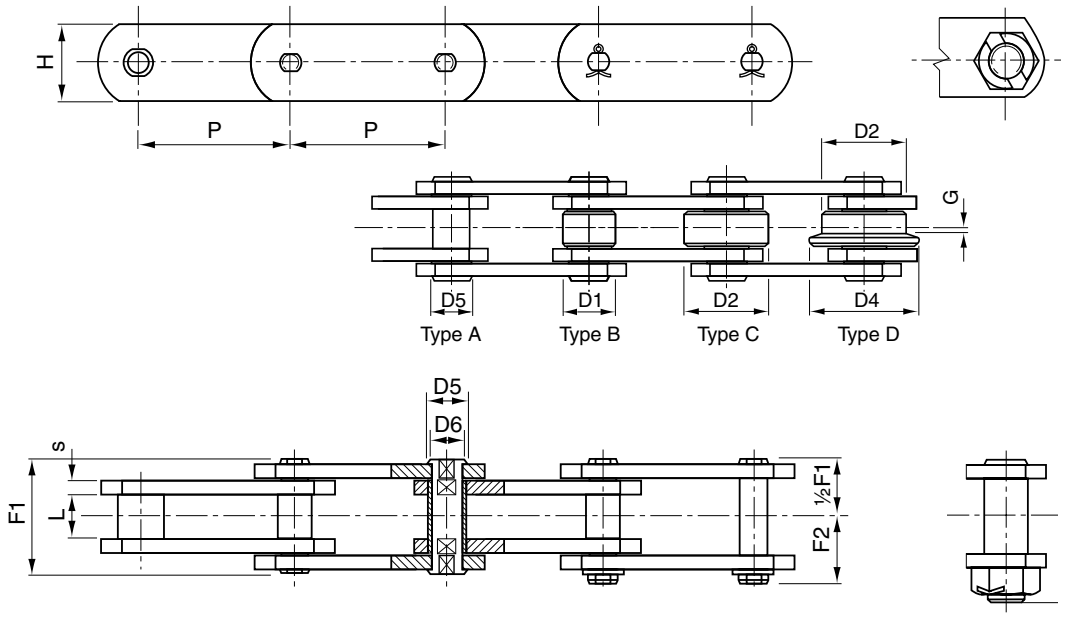

Solid Pin

Chain number	Pitch P	L	G	H	S	F1	F2	D1	D2	D4	D5	D6	Breaking Load kN	HT Breaking Load, kN	Weight (Type C) kg/m
M 20	40	16	3.5	18	2.5	33.0	19.0	12.5	25	32	9	6	20	32	2.4
“	50	“	“	“	“	“	“	“	“	“	“	“	“	“	2.0
“	63	“	“	“	“	“	“	“	“	“	“	“	“	“	1.8
“	80	“	“	“	“	“	“	“	“	“	“	“	“	“	1.6
M28	50	18	4.0	20	3	36.0	20.5	15.0	30	36	10	7	28	42	3.3
“	63	“	“	“	“	“	“	“	“	“	“	“	“	“	2.8
“	80	“	“	“	“	“	“	“	“	“	“	“	“	“	2.5
“	100	“	“	“	“	“	“	“	“	“	“	“	“	“	2.1
M 40	63	20	4.5	25	4	40.5	24.0	18.0	36	45	11	8	40	60	4.4
“	80	“	“	“	“	“	“	“	“	“	“	“	“	“	3.7
“	100	“	“	“	“	“	“	“	“	“	“	“	“	“	3.2
“	125	“	“	“	“	“	“	“	“	“	“	“	“	“	2.9
M 56	63	24	7.0	30	4	45.0	26.0	21.0	42	50	15	10	56	85	6.8
“	80	“	“	“	“	“	“	“	“	“	“	“	“	“	5.7
“	100	“	“	“	“	“	“	“	“	“	“	“	“	“	5.0
“	125	“	“	“	“	“	“	“	“	“	“	“	“	“	4.4
“	160	“	“	“	“	“	“	“	“	“	“	“	“	“	3.9
M 80	80	28	7.0	35	5	54.5	30.5	25.0	50	60	18	12	80	125	9.2
“	100	“	“	“	“	“	“	“	“	“	“	“	“	“	7.9
“	125	“	“	“	“	“	“	“	“	“	“	“	“	“	6.9
“	160	“	“	“	“	“	“	“	“	“	“	“	“	“	6.0
“	200	“	“	“	“	“	“	“	“	“	“	“	“	“	5.3

All dimensions in millimetres unless otherwise stated.

Every effort has been taken to ensure that the data listed in this catalogue is correct. Challenge accepts no liability for any inaccuracies or damage caused.

Conveyor Chain

M Series

Metric Conveyor Chain (DIN 8167)

M Series Solid Pin

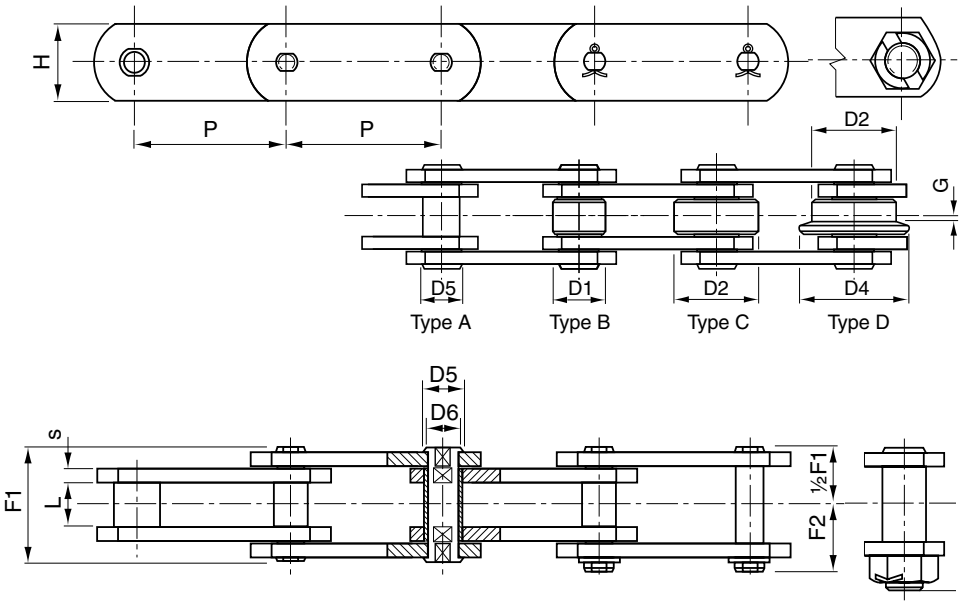

Solid Pin

Chain number	Pitch P	L	G	H	S	F1	F2	D1	D2	D4	D5	D6	Breaking Load kN	HT Breaking Load, kN	Weight (Type C) kg/m
M 112	80	32	7.5	40	6	63	36.0	30	60	75	21	15	112	175	14.0
“	100	“	“	“	“	“	“	“	“	“	“	“	“	“	12.0
“	125	“	“	“	“	“	“	“	“	“	“	“	“	“	10.4
“	160	“	“	“	“	“	“	“	“	“	“	“	“	“	9.0
“	200	“	“	“	“	“	“	“	“	“	“	“	“	“	7.9
M 160	100	37	8.5	50	7	72	41.5	36	70	90	25	18	160	260	18.9
“	125	“	“	“	“	“	“	“	“	“	“	“	“	“	16.3
“	160	“	“	“	“	“	“	“	“	“	“	“	“	“	14.0
“	200	“	“	“	“	“	“	“	“	“	“	“	“	“	12.2
“	250	“	“	“	“	“	“	“	“	“	“	“	“	“	11.0
M 224	125	43	10.0	60	8	84	47.0	42	85	105	30	21	224	340	25.8
“	160	“	“	“	“	“	“	“	“	“	“	“	“	“	22.0
“	200	“	“	“	“	“	“	“	“	“	“	“	“	“	19.0
“	250	“	“	“	“	“	“	“	“	“	“	“	“	“	16.7
“	315	“	“	“	“	“	“	“	“	“	“	“	“	“	14.9
M 315	160	48	10.5	70	10	97	55.0	50	100	124	36	25	315	520	33.3
“	200	“	“	“	“	“	“	“	“	“	“	“	“	“	28.7
“	250	“	“	“	“	“	“	“	“	“	“	“	“	“	25.2
“	315	“	“	“	“	“	“	“	“	“	“	“	“	“	22.3
“	400	“	“	“	“	“	“	“	“	“	“	“	“	“	20.0

Every effort has been taken to ensure that the data listed in this catalogue is correct. Challenge accepts no liability for any inaccuracies or damage caused. All dimensions in millimetres unless otherwise stated.

Conveyor Chain

M Series

Metric Conveyor Chain (DIN 8167)

M Series Solid Pin

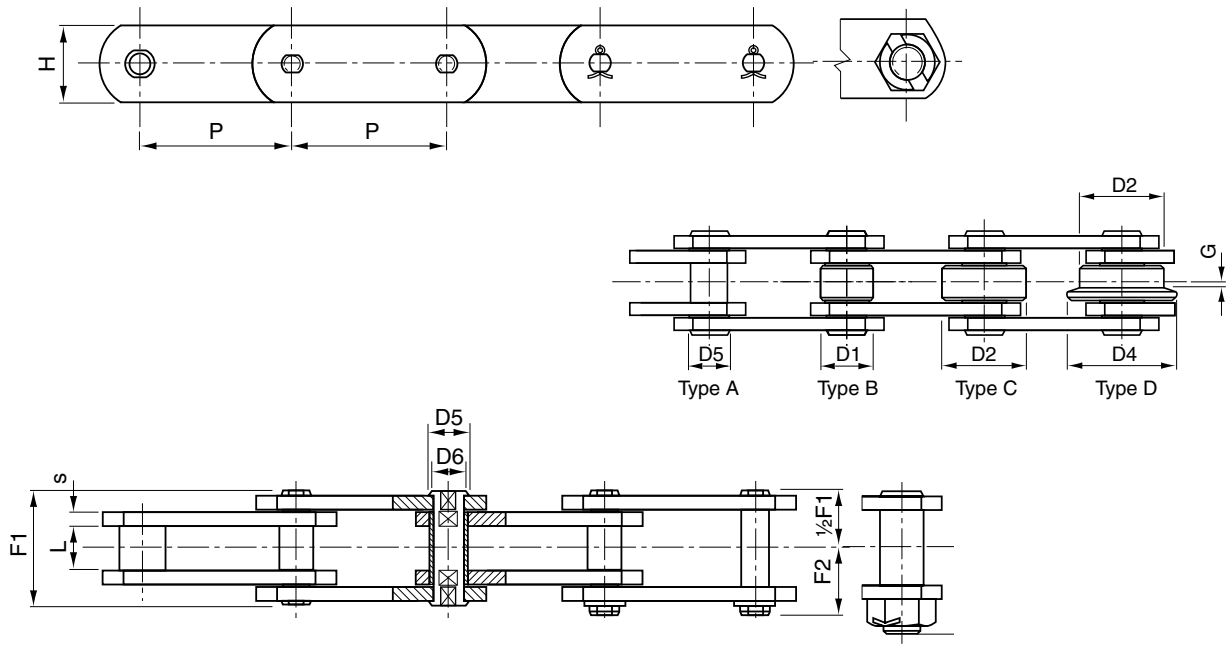

Solid Pin

Chain number	Pitch P	L	G	H	S	F1	F2	D1	D2	D4	D5	D6	Breaking Load kN	HT Breaking Load, kN	Weight (Type C) kg/m
M 450	200	56	11.5	80	12	114	67.0	60	120	149	42	30	450	700	40.5
“	250	“	“	“	“	“	“	“	“	“	“	“	“	“	39.5
“	315	“	“	“	“	“	“	“	“	“	“	“	“	“	34.5
“	400	“	“	“	“	“	“	“	“	“	“	“	“	“	30.5
M 630	250	67	15.0	100	14	137	87.5	70	140	170	50	36	630	900	64.0
“	315	“	“	“	“	“	“	“	“	“	“	“	“	“	55.5
“	400	“	“	“	“	“	“	“	“	“	“	“	“	“	49.0
“	500	“	“	“	“	“	“	“	“	“	“	“	“	“	43.6
M 900	250	78	17.0	120	16	153	95.0	85	170	210	60	44	900	1250	98.3
“	315	“	“	“	“	“	“	“	“	“	“	“	“	“	84.2
“	400	“	“	“	“	“	“	“	“	“	“	“	“	“	72.5
“	500	“	“	“	“	“	“	“	“	“	“	“	“	“	63.8
“	600	“	“	“	“	“	“	“	“	“	“	“	“	“	56.6

All dimensions in millimetres unless otherwise stated.

Every effort has been taken to ensure that the data listed in this catalogue is correct. Challenge accepts no liability for any inaccuracies or damage caused.

Conveyor Chain Attachments

M Series Attachments

Metric Conveyor Chain (DIN 8167)

M Series Attachments

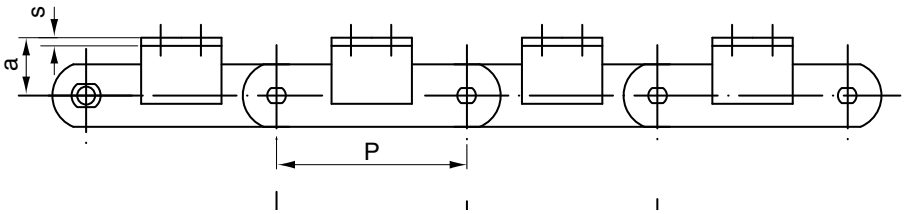

Note: Attachments are also available with 1, 2 or 3 holes and in K1, K2 and K3 (both sides) configuration

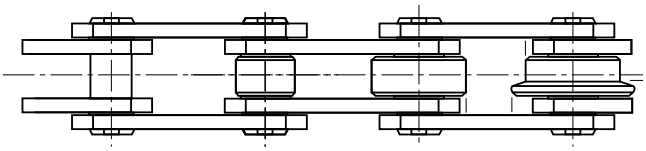

Type A Type B Type C Type D

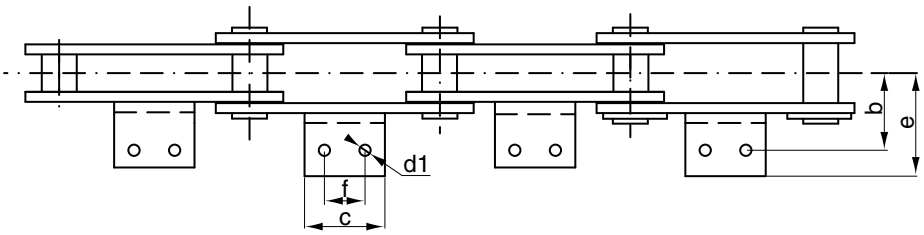

Chain Number	Pitch P	a	b	c	d1	e	f	Welded or Integral attachment	Chain Weight - Excluding Attachments kg/metre Type A	Type B	Type C	Type D	Attachment Weight (A2) kg each
M 20	40	16	27	14	6.6	40	*		1.10	1.3	2.4	2.5	0.02
“	50	“	“	14	“	“	*		1.01	1.3	2.0	2.1	0.02
“	63	“	“	35	“	“	20	25x3	0.99	1.2	1.8	1.9	0.04
“	80	“	“	50	“	“	35	“	0.90	1.1	1.6	1.6	0.06
M 28	50	20	32	20	9	47	*	20x3	1.60	1.9	3.3	3.4	0.02
“	63	“	“	20	“	“	*	30x3	1.50	1.7	2.8	2.9	0.02
“	80	“	“	45	“	“	25	“	1.40	1.6	2.5	2.6	0.05
“	100	“	“	60	“	“	40	“	1.30	1.5	2.1	2.2	0.08
M 40	63	25	35	31	9	50	*	30x4	2.25	2.6	4.4	4.6	0.04
“	80	“	“	45	“	“	20	“	2.00	2.3	3.7	3.9	0.07
“	100	“	“	60	“	“	40	“	1.90	2.1	3.2	3.4	0.10
“	125	“	“	85	“	“	65	“	1.80	2.0	2.9	3.0	0.15
M 56	63	30	44	22	11	61	*	40x4	3.40	3.9	6.8	7.2	0.05
“	80	“	“	30	“	“	*	“	3.00	3.4	5.7	6.0	0.07
“	100	“	“	50	“	“	25	“	2.80	3.1	5.0	5.2	0.12
“	125	“	“	75	“	“	50	“	2.60	2.9	4.4	4.5	0.18
“	160	“	“	110	“	“	85	“	2.54	2.7	3.9	4.1	0.27
M 80	80	35	48	30	11	65	*	40x4	4.70	5.4	9.2	9.4	0.07
“	100	“	“	50	“	“	25	“	4.30	4.8	7.9	8.0	0.12
“	125	“	“	75	“	“	50	“	4.00	4.4	6.9	7.0	0.18
“	160	“	“	110	“	“	85	“	3.70	4.0	6.0	6.1	0.27
“	200	“	“	150	“	“	125	“	3.50	3.8	5.3	5.4	0.36

* Attachment With One Hole

Every effort has been taken to ensure that the data listed in this catalogue is correct. Challenge accepts no liability for any inaccuracies or damage caused. All dimensions in millimetres unless otherwise stated.

Conveyor Chain Attachments

M Series Attachments

Metric Conveyor Chain (DIN 8167)

M Series Attachments

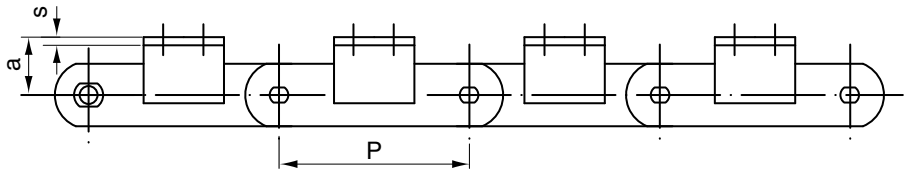

Note: Attachments are also available with 1, 2 or 3 holes and in K1, K2 and K3 (both sides) configuration

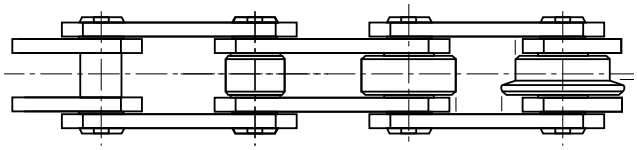

Type A Type B Type C Type D

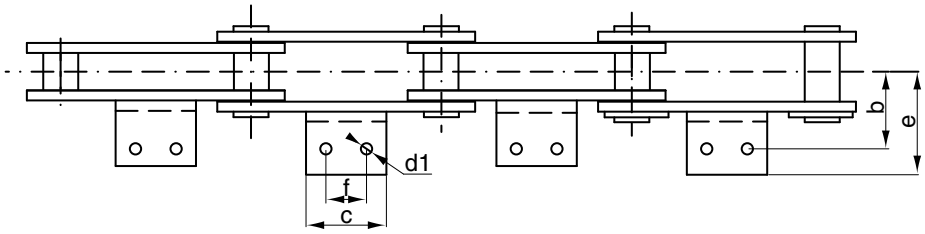

Chain Number	Pitch P	a	b	c	d1	e	f	Welded or Integral attachment	Chain Weight - Excluding Attachments kg/metre Type A	Type B	Type C	Type D	Attachment Weight (A2) kg each
M 112	80	40	55	28	14	80	*	50x6	6.8	8.0	14.0	14.7	0.13
“	100	“	“	40	“	“	*	“	6.2	7.2	12.0	12.5	0.18
“	125	“	“	65	“	“	35	“	5.7	6.5	10.4	10.8	0.30
“	160	“	“	95	“	“	65	“	5.3	5.9	9.0	9.3	0.44
“	200	“	“	130	“	“	100	“	5.0	5.5	7.9	8.2	0.59
M 160	100	45	62	30	14	85	*	50x6	9.7	11.2	18.9	20.2	0.13
“	125	“	“	50	“	“	25	“	8.9	10.0	16.3	18.1	0.23
“	160	“	“	80	“	“	50	“	8.2	9.1	14.0	15.4	0.37
“	200	“	“	115	“	“	85	“	7.6	8.4	12.2	13.4	0.53
“	250	“	“	175	“	“	145	“	7.3	7.9	11.0	12.0	0.80
M 224	125	55	70	35	18	100	*	63x8	13.0	14.8	25.8	26.6	0.30
“	160	“	“	60	“	“	*	“	12.0	13.4	22.0	22.7	0.43
“	200	“	“	100	“	“	65	“	11.0	12.1	19.0	19.5	0.71
“	250	“	“	160	“	“	125	“	10.3	11.2	16.7	17.1	1.13
“	315	“	“	230	“	“	190	“	9.8	10.5	14.9	15.2	1.60
M 315	160	65	80	35	18	115	*	70x8	18.3	20.4	33.3	34.6	0.32
“	200	“	“	85	“	“	50	“	16.7	18.4	28.7	29.7	0.66
“	250	“	“	140	“	“	100	“	15.6	17.0	25.2	26.0	1.10
“	315	“	“	190	“	“	155	“	14.6	15.7	22.3	22.9	1.46
“	400	“	“	205	“	“	155	“	13.9	14.8	20.0	20.5	1.46

All dimensions in millimetres unless otherwise stated.

Every effort has been taken to ensure that the data listed in this catalogue is correct. Challenge accepts no liability for any inaccuracies or damage caused.

Conveyor Chain Attachments

M Series Attachments

Metric Conveyor Chain (DIN 8167)

M Series Attachments

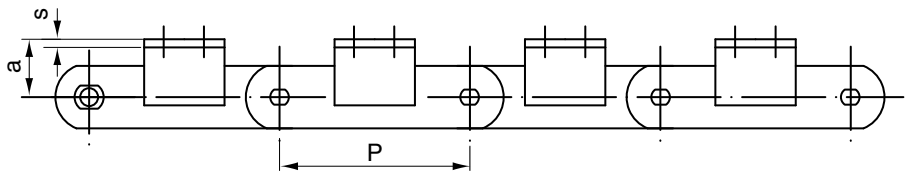

Note: Attachments are also available with 1, 2 or 3 holes and in K1, K2 and K3 (both sides) configuration

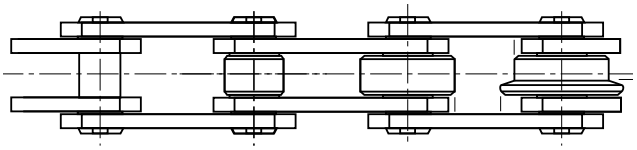

Type A Type B Type C Type D

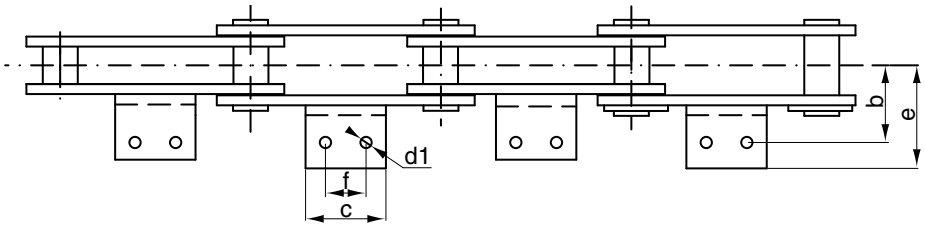

Chain Number	Pitch P	a	b	c	d1	e	f	Welded or Integral attachment	Chain Weight - Excluding Attachments kg/metre Type A	Type B	Type C	Type D	Attachment Weight (A2) kg each
M 450	200	75	90	50	18	125	*	70x9	24.0	27.0	40.5	47.0	0.33
“	250	“	“	125	“	“	85	“	22.0	24.9	39.5	41.0	1.00
“	315	“	“	195	“	“	155	“	21.0	23.0	34.5	36.0	1.60
“	400	“	“	280	“	“	240	“	19.6	21.2	30.5	31.4	2.30
M 630	250	90	115	50	24	165	*	100x12	36.0	40.8	64.0	66.9	0.90
“	315	“	“	150	“	“	100	“	33.4	36.6	55.5	57.7	2.70
“	400	“	“	240	“	“	190	“	31.5	33.9	49.0	50.7	4.30
“	500	“	“	350	“	“	300	“	29.6	31.6	43.6	45.0	6.20
M 900	250	110	140	60	30	195	*	120x15	49.7	56.5	98.3	104.5	1.60
“	315	“	“	125	“	“	65	“	45.5	51.8	84.2	89.7	3.30
“	400	“	“	215	“	“	155	“	42.0	46.2	72.5	76.9	5.70
“	500	“	“	300	“	“	240	“	39.3	42.7	63.8	67.6	8.00
“	600	“	“	350	“	“	300	“	37.3	39.9	56.6	58.9	8.00

* Attachment With One Hole

Every effort has been taken to ensure that the data listed in this catalogue is correct. Challenge accepts no liability for any inaccuracies or damage caused. All dimensions in millimetres unless otherwise stated.

Conveyor Chain

MC Series Hollow Pin

Metric Conveyor Chain (DIN 8167)

MC Series Hollow Pin

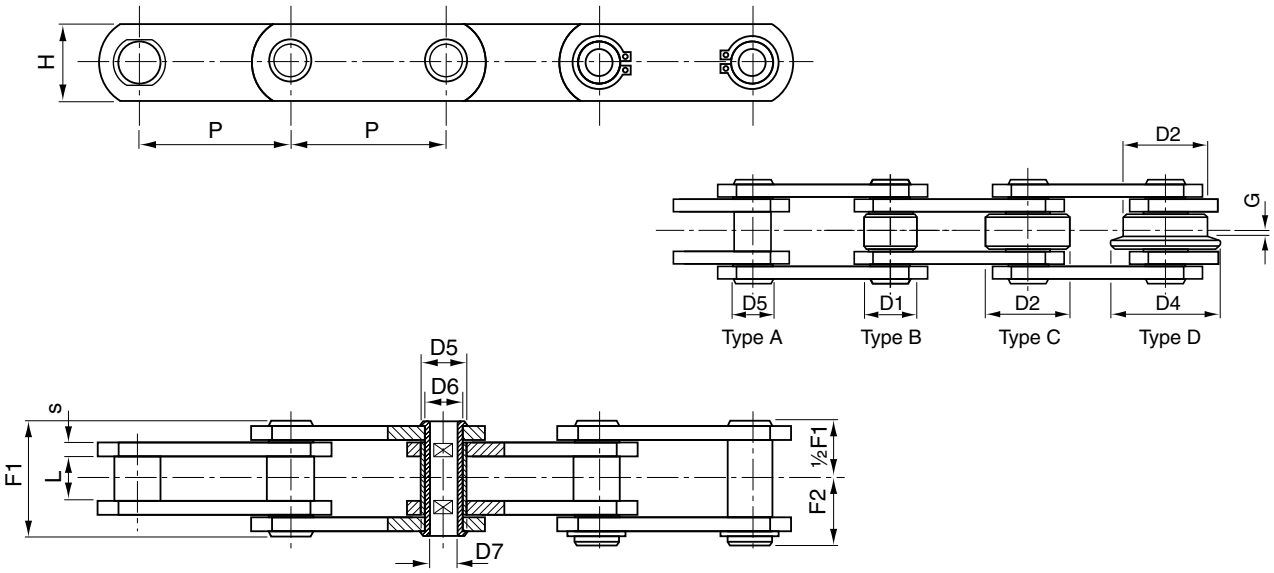

Hollow Pin

Chain number	Pitch P	L	G	H	S	F1	F2	D1	D2	D4	D5	D6	D7	Breaking Load kN	HT Breaking Load, kN	Weight (Type C) kg/m
MC 28	50	20	4.5	25	3	36.0	20.5	25	36	45	17	13.0	8.2	28	40	4.3
“	63	“	“	“	“	“	“	“	“	“	“	“	“	“	“	3.8
“	80	“	“	“	“	“	“	“	“	“	“	“	“	“	“	3.2
“	100	“	“	“	“	“	“	“	“	“	“	“	“	“	“	2.8
“	125	“	“	“	“	“	“	“	“	“	“	“	“	“	“	2.5
MC 56	63	24	7.0	35	4	45.0	25.0	30	50	60	21	15.5	10.2	56	90	8.5
“	80	“	“	“	“	“	“	“	“	“	“	“	“	“	“	7.2
“	100	“	“	“	“	“	“	“	“	“	“	“	“	“	“	6.2
“	125	“	“	“	“	“	“	“	“	“	“	“	“	“	“	5.4
“	160	“	“	“	“	“	“	“	“	“	“	“	“	“	“	4.7
MC 112	80	32	8.5	50	6	62.5	33.0	42	70	85	29	22.0	14.3	112	180	16.6
“	100	“	“	“	“	“	“	“	“	“	“	“	“	“	“	14.0
“	125	“	“	“	“	“	“	“	“	“	“	“	“	“	“	11.2
“	160	“	“	“	“	“	“	“	“	“	“	“	“	“	“	10.2
“	200	“	“	“	“	“	“	“	“	“	“	“	“	“	“	8.9
“	250	“	“	“	“	“	“	“	“	“	“	“	“	“	“	7.9
MC 224	125	43	10.5	70	8	83.0	44.0	60	100	120	42	30.0	20.3	224	350	32.3
“	160	“	“	“	“	“	“	“	“	“	“	“	“	“	“	27.1
“	200	“	“	“	“	“	“	“	“	“	“	“	“	“	“	23.5
“	250	“	“	“	“	“	“	“	“	“	“	“	“	“	“	20.6
“	315	“	“	“	“	“	“	“	“	“	“	“	“	“	“	17.2

All dimensions in millimetres unless otherwise stated.

Every effort has been taken to ensure that the data listed in this catalogue is correct. Challenge accepts no liability for any inaccuracies or damage caused.

Conveyor Chain

MT/ME Series Deep Link

Metric Conveyor Chain (DIN 8167)

MT/ME Series Deep Link

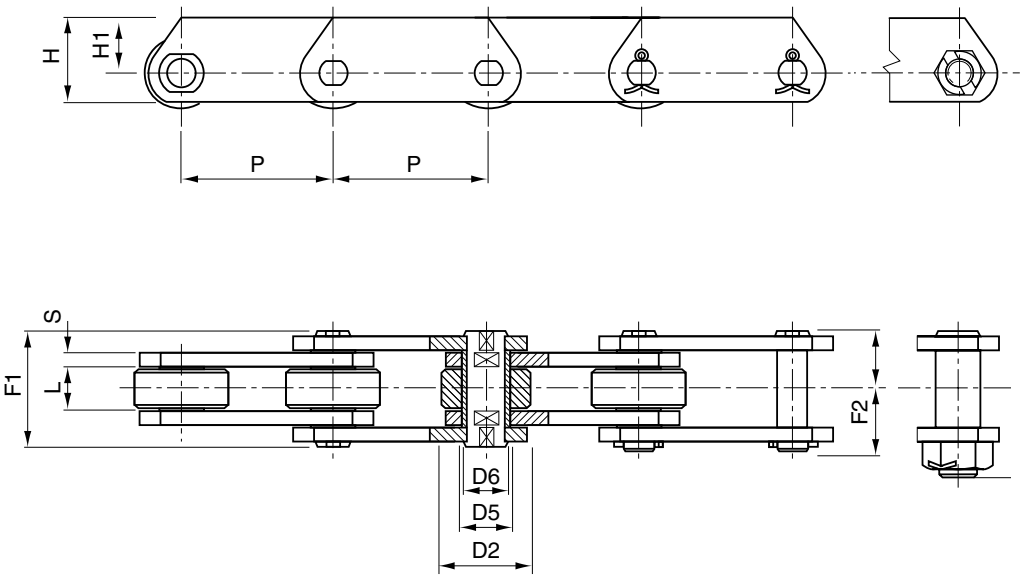

Deep Link

Chain Number	Pitch P	L	S	H	H1	F1	F2	D2	D5	D6	Breaking Load kN	HT Breaking Load, kN	Weight (Type C) kg/m
ME 20	40	16	2.5	25	16.0	33.0	19.0	25	9	6	20	32	3.0
“	50	“	“	“	“	“	“	“	“	“	“	“	2.6
“	63	“	“	“	“	“	“	“	“	“	“	“	2.3
“	80	“	“	“	“	“	“	“	“	“	“	“	2.0
ME 28	50	18	3.0	30	20.0	36.0	20.5	30	10	7	28	42	4.1
“	63	“	“	“	“	“	“	“	“	“	“	“	3.5
“	80	“	“	“	“	“	“	“	“	“	“	“	3.1
“	100	“	“	“	“	“	“	“	“	“	“	“	2.8
ME 40	63	20	4.0	35	22.5	40.5	24.0	36	11	8	40	60	5.5
“	80	“	“	“	“	“	“	“	“	“	“	“	4.8
“	100	“		“	“	“	“	“	“	“	“	“	4.2
“	125	“	“	“	“	“	“	“	“	“	“	“	3.7
ME 56	63	24	4.0	45	30.0	45.0	26.0	42	15	10	56	85	8.3
“	80	“	“	“	“	“	“	“	“	“	“	“	7.0
“	100	“	“	“	“	“	“	“	“	“	“	“	6.1
“	125	“	“	“	“	“	“	“	“	“	“	“	5.4
ME 80	80	28	5.0	50	32.5	54.5	30.5	50	18	12	80	125	11.0
“	100	“	“	“	“	“	“	“	“	“	“	“	9.5
“	125	“	“	“	“	“	“	“	“	“	“	“	8.5
“	160	“	“	“	“	“	“	“	“	“	“	“	7.2
“	200	“	“	“	“	“	“	“	“	“	“	“	6.0

Every effort has been taken to ensure that the data listed in this catalogue is correct. Challenge accepts no liability for any inaccuracies or damage caused. All dimensions in millimetres unless otherwise stated.

Conveyor Chain

MT/ME Series

Metric Conveyor Chain (DIN 8167)

MT/ME Series Deep Link

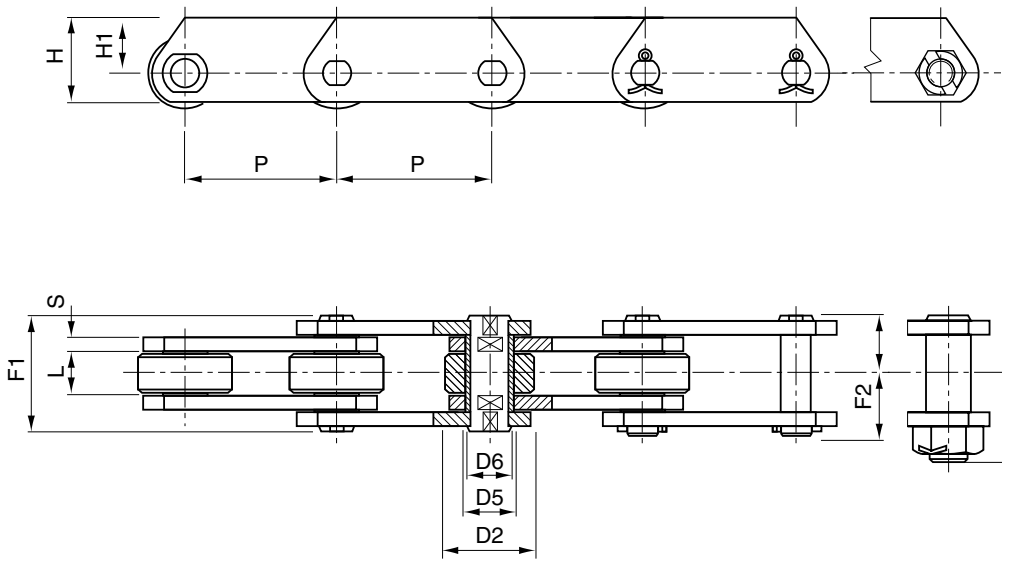

Deep Link

Chain Number	Pitch P	L	S	H	H1	F1	F2	D2	D5	D6	Breaking Load kN	HT Breaking Load, kN	Weight kg/m
ME 112	80	32	6	60	40	63	36.0	60	21	15	112	175	17.0
“	100	“	“	“	“	“	“	“	“	“	“	“	14.5
“	125	“	“	“	“	“	“	“	“	“	“	“	13.0
“	160	“	“	“	“	“	“	“	“	“	“	“	11.0
“	200	“	“	“	“	“	“	“	“	“	“	“	10.0
ME 160	100	37	7	70	45	72	41.5	70	25	18	160	260	21.5
“	125	“	“	“	“	“	“	“	“	“	“	“	19.0
“	160	“	“	“	“	“	“	“	“	“	“	“	17.0
“	200	“	“	“	“	“	“	“	“	“	“	“	15.0
“	250	“	“	“	“	“	“	“	“	“	“	“	13.5
ME 224	125	43	8	90	60	84	47.0	85	30	21	224	340	32.5
“	160	“	“	“	“	“	“	“	“	“	“	“	27.5
“	200	“	“	“	“	“	“	“	“	“	“	“	23.0
“	250	“	“	“	“	“	“	“	“	“	“	“	21.0
“	315	“	“	“	“	“	“	“	“	“	“	“	19.0
ME 315	160	48	10	100	65	97	55.0	100	36	25	315	520	43.0
“	200	“	“	“	“	“	“	“	“	“	“	“	37.0
“	250	“	“	“	“	“	“	“	“	“	“	“	32.0
“	315	“	“	“	“	“	“	“	“	“	“	“	28.6
“	400	“	“	“	“	“	“	“	“	“	“	“	25.5

All dimensions in millimetres unless otherwise stated.

Every effort has been taken to ensure that the data listed in this catalogue is correct. Challenge accepts no liability for any inaccuracies or damage caused.

Conveyor Chain

MT/ME Series

Metric Conveyor Chain (DIN 8167)

MT/ME series Deep Link

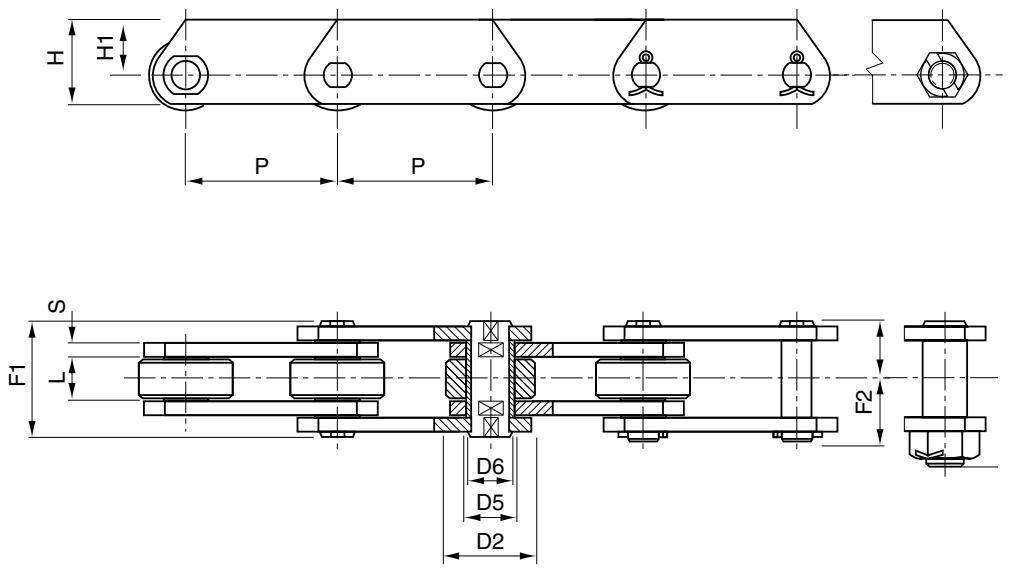

Deep Link

Chain Number	Pitch P	L	S	H	H1	F1	F2	D2	D5	D6	Breaking Load kN	HT Breaking Load, kN	Weight kg/m
ME 450	200	56	12	120	80	114	67.0	120	42	30	450	700	47
“	250	“	“	“	“	“	“	“	“	“	“	“	41
“	315	“	“	“	“	“	“	“	“	“	“	“	36
“	400	“	“	“	“	“	“	“	“	“	“	“	32
ME 630	250	66	14	140	90	137	87.5	140	50	36	630	900	71
“	315	“	“	“	“	“	“	“	“	“	“	“	62.5
“	400	“	“	“	“	“	“	“	“	“	“	“	56
“	500	“	“	“	“	“	“	“	“	“	“	“	50.6
“	600	“	“	“	“	“	“	“	“	“	“	“	46.5
ME 900	250	78	16	180	120	153	95.0	170	60	44	900	1,250	108.5
“	315	“	“	“	“	“	“	“	“	“	“	“	94.5
“	400	“	“	“	“	“	“	“	“	“	“	“	82.5
“	500	“	“	“	“	“	“	“	“	“	“	“	73.8
“	600	“	“	“	“	“	“	“	“	“	“	“	66.7

Every effort has been taken to ensure that the data listed in this catalogue is correct. Challenge accepts no liability for any inaccuracies or damage caused. All dimensions in millimetres unless otherwise stated.

Conveyor Chain

FV/C Series

Metric Conveyor Chain (DIN 8165)

FV/C Series Solid Pin

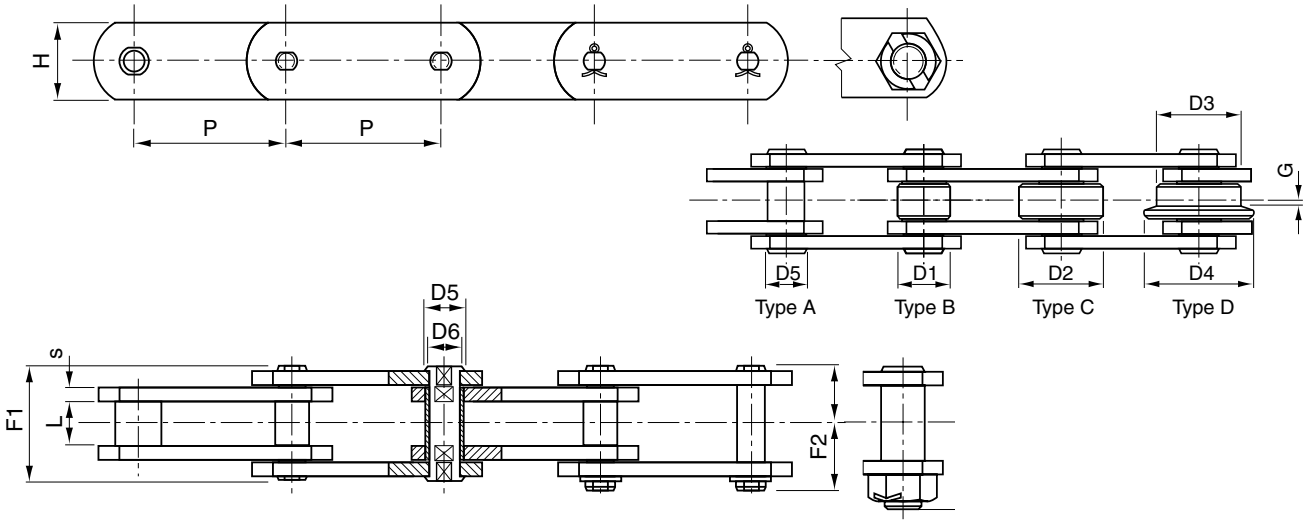

Solid Pin

DIN Number	Chain number	Pitch P	L	G	H	S	F1	F2	D1	D2	D3	D4	D5	D6	Breaking Load kN	HT Breaking Load, kN	Weight (Type C) kg/m
FV40	C42	50	18	4	25	3	36	21	20	32	40	50	15	10	42	47	4.0
“	“	63	“	“	“	“	“	“	“	“	“	“	“	“	“	“	3.3
“	“	80	“	“	“	“	“	“	“	“	“	“	“	“	“	“	3.0
“	“	100	“	“	“	“	“	“	“	“	“	“	“	“	“	“	2.6
“	“	125	“	“	“	“	“	“	“	“	“	“	“	“	“	“	2.3
FV63	C64	63	22	5	30	4	45	26	26	40	50	63	18	12	64	75	6.4
“	“	80	“	“	“	“	“	“	“	“	“	“	“	“	“	“	5.3
“	“	100	“	“	“	“	“	“	“	“	“	“	“	“	“	“	4.7
“	“	125	“	“	“	“	“	“	“	“	“	“	“	“	“	“	4.0
“	“	160	“	“	“	“	“	“	“	“	“	“	“	“	“	“	3.5
FV90	C100	63	25	6.5	35	5	53	30	30	48	63	78	20	14	100	115	10.0
“	“	80	“	“	“	“	“	“	“	“	“	“	“	“	“	“	8.6
“	“	100	“	“	“	“	“	“	“	“	“	“	“	“	“	“	7.3
“	“	125	“	“	“	“	“	“	“	“	“	“	“	“	“	“	6.5
“	“	160	“	“	“	“	“	“	“	“	“	“	“	“	“	“	5.8
“	“	200	“	“	“	“	“	“	“	“	“	“	“	“	“	“	4.8
“	“	250	“	“	“	“	“	“	“	“	“	“	“	“	“	“	4.6
FV112	C120	100	30	7.5	40	6	62	35	32	55	72	90	22	16	120	170	11.2
“	“	125	“	“	“	“	“	“	“	“	“	“	“	“	“	“	9.6
“	“	160	“	“	“	“	“	“	“	“	“	“	“	“	“	“	8.3
“	“	200	“	“	“	“	“	“	“	“	“	“	“	“	“	“	7.5
“	“	250	“	“	“	“	“	“	“	“	“	“	“	“	“	“	6.7

All dimensions in millimetres unless otherwise stated.

Every effort has been taken to ensure that the data listed in this catalogue is correct. Challenge accepts no liability for any inaccuracies or damage caused.

Conveyor Chain

FV/C Series

Metric Conveyor Chain (DIN 8165)

FV/C Series Solid Pin

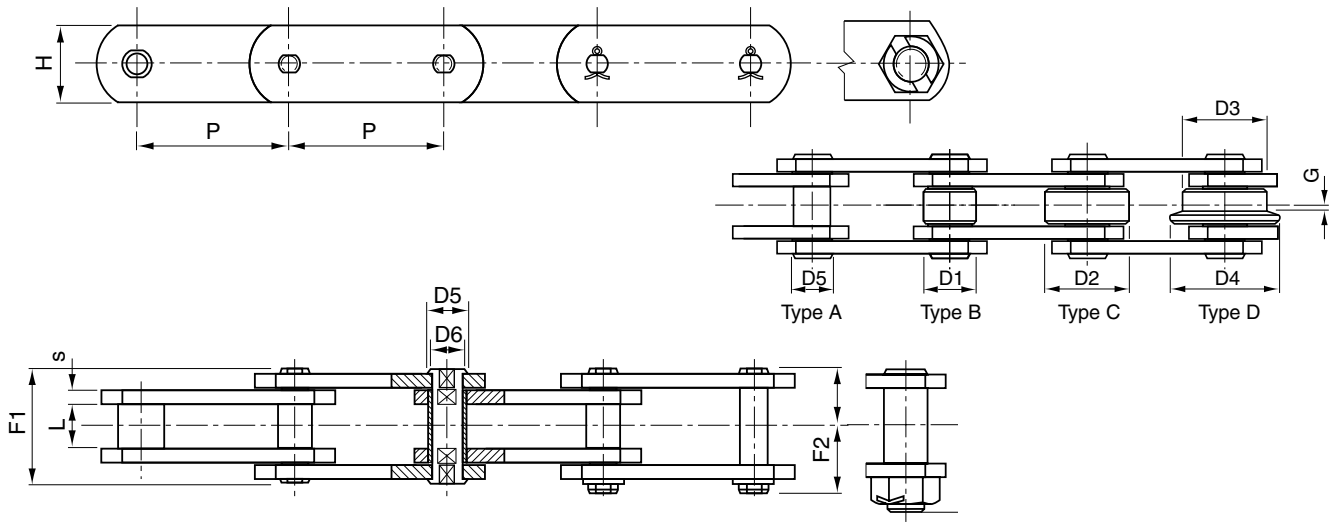

Solid Pin

DIN Number	Chain number	Pitch P	L	G	H	S	F1	F2	D1	D2	D3	D4	D5	D6	Breaking Load kN	HT Breaking Load, kN	Weight (Type C) kg/m
FV140	C145	100	35	9	45	6	67	38	36	60	80	100	26	18	145	180	14.3
“	“	125	“	“	“	“	“	“	“	“	“	“	“	“	“	“	12.3
“	“	160	“	“	“	“	“	“	“	“	“	“	“	“	“	“	10.5
“	“	200	“	“	“	“	“	“	“	“	“	“	“	“	“	“	9.0
“	“	250	“	“	“	“	“	“	“	“	“	“	“	“	“	“	8.3
FV180	C190	125	45	13	50	8	86	49	42	70	100	125	30	20	190	250	18.9
“	“	160	“	“	“	“	“	“	“	“	“	“	“	“	“	“	16.7
“	“	200	“	“	“	“	“	“	“	“	“	“	“	“	“	“	14.8
“	“	250	“	“	“	“	“	“	“	“	“	“	“	“	“	“	13.0
“	“	315	“	“	“	“	“	“	“	“	“	“	“	“	“	“	11.6
FV250	C275	160	55	15	60	8	97	55	50	80	125	155	36	26	275	300	23.8
“	“	200	“	“	“	“	“	“	“	“	“	“	“	“	“	“	20.6
“	“	250	“	“	“	“	“	“	“	“	“	“	“	“	“	“	17.9
“	“	315	“	“	“	“	“	“	“	“	“	“	“	“	“	“	15.8
“	“	400	“	“	“	“	“	“	“	“	“	“	“	“	“	“	13.9
FV315	C370	160	65	18	70	10	113	70	60	90	140	175	42	30	370	480	33.3
“	“	200	“	“	“	“	“	“	“	“	“	“	“	“	“	“	28.9
“	“	250	“	“	“	“	“	“	“	“	“	“	“	“	“	“	25.3
“	“	315	“	“	“	“	“	“	“	“	“	“	“	“	“	“	22.4
“	“	400	“	“	“	“	“	“	“	“	“	“	“	“	“	“	20.2

Every effort has been taken to ensure that the data listed in this catalogue is correct. Challenge accepts no liability for any inaccuracies or damage caused. All dimensions in millimetres unless otherwise stated.

Conveyor Chain

FV/CC Series

Metric Conveyor Chain (DIN 8165)

FV/CC Series Hollow Pin

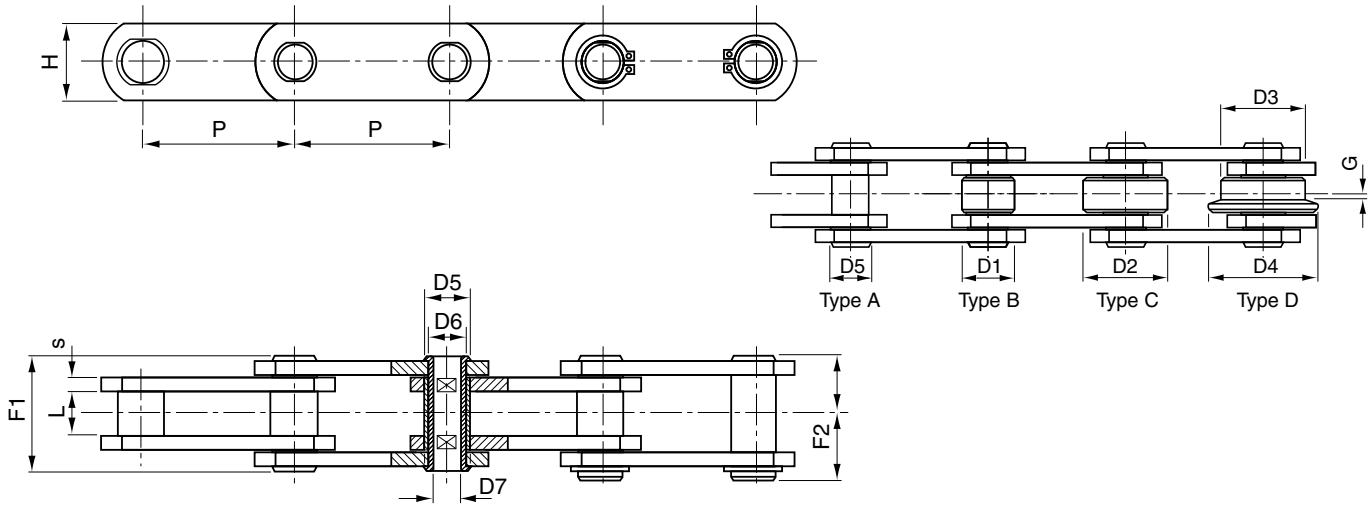

Hollow Pin

DIN Number	Chain number	Pitch P	L	G	H	S	F1	F2	D1	D2	D3	D4	D5	D6	D7	Breaking Load kN	Weight (Type C) kg/m
FV63	CC46	63	22	5	30	4	45	28	26	40	50	63	18	12	8	46	5.7
“	“	80	“	“	“	“	“	“	“	“	“	“	“	“	“	“	4.9
“	“	100	“	“	“	“	“	“	“	“	“	“	“	“	“	“	4.3
“	“	125	“	“	“	“	“	“	“	“	“	“	“	“	“	“	3.8
“	“	160	“	“	“	“	“	“	“	“	“	“	“	“	“	“	3.4
FV90	CC73	63	25	6.5	35	5	53	30	30	48	63	78	20	14	10	73	9.1
“	“	80	“	“	“	“	“	“	“	“	“	“	“	“	“	“	7.8
“	“	100	“	“	“	“	“	“	“	“	“	“	“	“	“	“	6.8
“	“	125	“	“	“	“	“	“	“	“	“	“	“	“	“	“	5.6
“	“	160	“	“	“	“	“	“	“	“	“	“	“	“	“	“	5.3
“	“	200	“	“	“	“	“	“	“	“	“	“	“	“	“	“	4.7
“	“	250	“	“	“	“	“	“	“	“	“	“	“	“	“	“	4.3
FV112	CC90	100	30	7.5	40	6	62	32	32	55	72	90	22	16	11	90	10.2
“	“	125	“	“	“	“	“	“	“	“	“	“	“	“	“	“	8.9
“	“	160	“	“	“	“	“	“	“	“	“	“	“	“	“	“	7.8
“	“	200	“	“	“	“	“	“	“	“	“	“	“	“	“	“	7.0
“	“	250	“	“	“	“	“	“	“	“	“	“	“	“	“	“	6.3
FV140	CC110	100	35	9	45	6	67	35	36	60	80	100	26	18	12	110	12.9
“	“	125	“	“	“	“	“	“	“	“	“	“	“	“	“	“	11.2
“	“	160	“	“	“	“	“	“	“	“	“	“	“	“	“	“	9.7
“	“	200	“	“	“	“	“	“	“	“	“	“	“	“	“	“	8.6
“	“	250	“	“	“	“	“	“	“	“	“	“	“	“	“	“	7.7

All dimensions in millimetres unless otherwise stated.

Every effort has been taken to ensure that the data listed in this catalogue is correct. Challenge accepts no liability for any inaccuracies or damage caused.

Conveyor Chain

FV/CC Series

Metric Conveyor Chain (DIN 8165)

FV/CC Series Hollow Pin

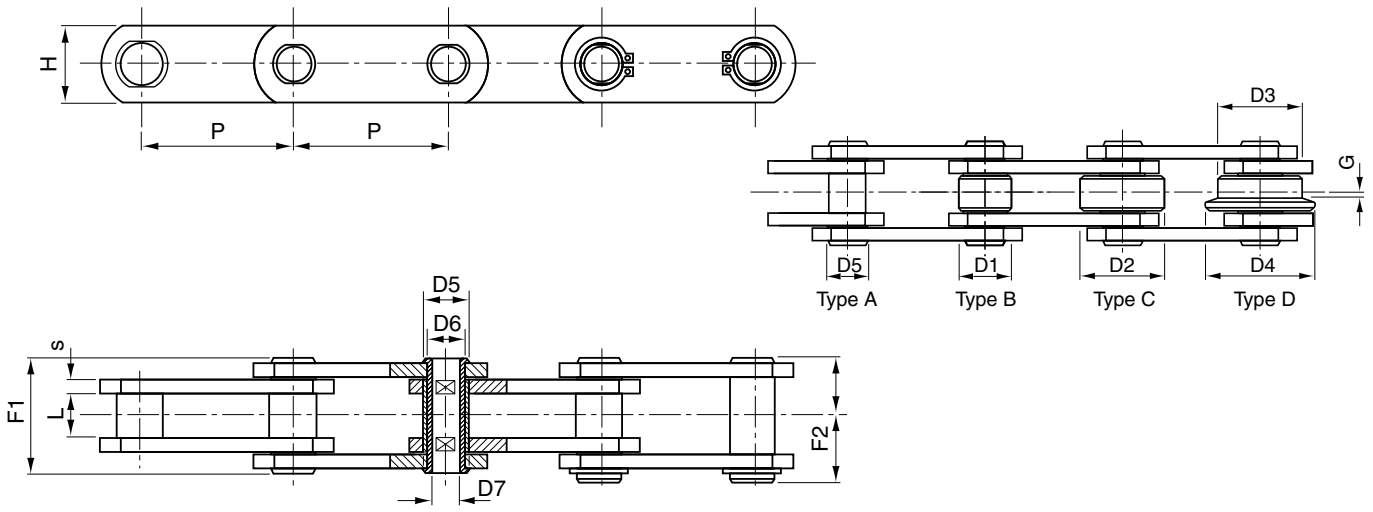

Hollow Pin

DIN Number	Chain number	Pitch P	L	G	H	S	F1	F2	D1	D2	D3	D4	D5	D6	D7	Breaking Load kN	Weight (Type C) kg/m
FV180	CC145	125	45	13	50	8	86	45	42	70	100	125	30	20	14	145	18.2
"	"	160	"	"	"	"	"	"	"	"	"	"	"	"	"	"	15.6
"	"	200	"	"	"	"	"	"	"	"	"	"	"	"	"	"	13.8
"	"	250	"	"	"	"	"	"	"	"	"	"	"	"	"	"	12.3
"	"	315	"	"	"	"	"	"	"	"	"	"	"	"	"	"	11.0
FV250	CC215	160	55	15	60	8	97	55	50	80	125	155	36	26	18	215	20.5
"	"	200	"	"	"	"	"	"	"	"	"	"	"	"	"	"	18.0
"	"	250	"	"	"	"	"	"	"	"	"	"	"	"	"	"	15.9
"	"	315	"	"	"	"	"	"	"	"	"	"	"	"	"	"	14.2
FV315	CC295	160	65	18	70	10	117	63	60	90	140	175	42	30	20	295	34.1
"	"	200	"	"	"	"	"	"	"	"	"	"	"	"	"	"	29.5
"	"	250	"	"	"	"	"	"	"	"	"	"	"	"	"	"	25.8
"	"	315	"	"	"	"	"	"	"	"	"	"	"	"	"	"	22.8
"	"	400	"	"	"	"	"	"	"	"	"	"	"	"	"	"	20.2

Every effort has been taken to ensure that the data listed in this catalogue is correct. Challenge accepts no liability for any inaccuracies or damage caused. All dimensions in millimetres unless otherwise stated.

Conveyor Chain Attachments

FV Series Attachments

Metric Conveyor Chain (DIN 8165)

FV Series Attachments

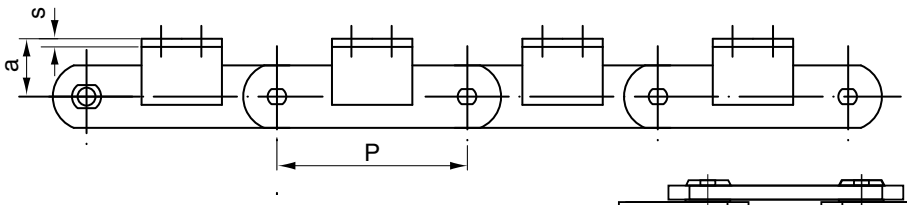

Note: Attachments are also available with 1, 2 or 3 holes and in K1, K2 and K3 (both sides) configuration

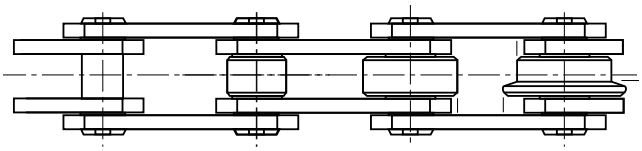

Type A Type B Type C Type D

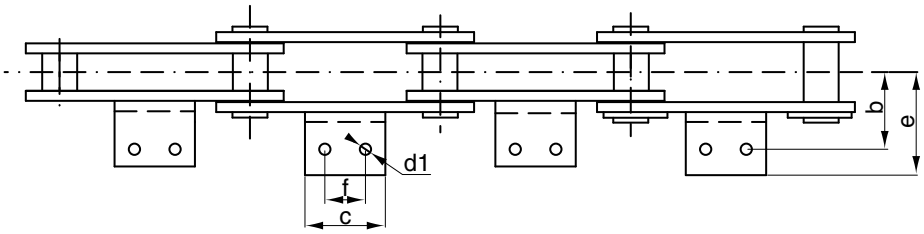

DIN Number	Chain Number	Pitch P	a	b	c	d1	e	f	Welded or Integral attachment	Chain Weight - Excluding Attachments kg/metre Type A	Type B	Type C	Type D	Attachment Weight (A2) kg each
FV40	C42	50	20	25	45	6.5	64.0	*		2.4	2.9	4.0	5.6	0.050
“	“	63	“	“	31	“	40.5	*		2.0	2.4	3.3	4.5	0.036
“	“	80	“	“	45	“	“	25	25x3	1.9	2.2	3.0	3.9	0.050
“	“	100	“	“	50	“	“	30	“	1.7	2.0	2.6	3.3	0.056
“	“	125	“	“	60	“	“	30	“	1.6	1.9	2.3	3.0	0.067
FV63	C64	63	30	34	40	8.4	50.0	*	30x4	3.8	4.5	6.4	8.9	0.063
“	“	80	“	“	45	“	“	25	“	3.2	3.8	5.3	7.2	0.095
“	“	100	“	“	50	“	“	30	“	3.0	3.5	4.7	6.2	0.110
“	“	125	“	“	60	“	“	40	“	2.7	3.0	4.0	5.3	0.140
“	“	160	“	“	70	“	“	50	“	2.4	2.7	3.5	4.4	0.170
FV90	C100	63	35	40	30	8.4	64.0	*	40x4	5.6	6.8	10.0	14.7	0.072
“	“	80	“	“	45	“	“	25	“	5.1	6.0	8.6	12.3	0.110
“	“	100	“	“	50	“	“	30	“	4.5	5.3	7.3	10.3	0.130
“	“	125	“	“	60	“	“	40	“	4.2	4.8	6.5	8.8	0.160
“	“	160	“	“	70	“	“	50	“	4.0	4.5	5.8	7.6	0.200
“	“	200	“	“	80	“	“	60	“	3.5	3.8	4.8	5.8	0.240
“	“	250	“	“	85	“	“	65	“	3.4	3.7	4.6	5.4	0.210
FV112	C120	100	40	50	50	11.0	70.0	30	40x5	6.7	7.7	11.2	18.8	0.200
“	“	125	“	“	65	“	“	40	“	6.0	6.8	9.6	15.7	0.270
“	“	160	“	“	75	“	“	50	“	5.5	6.1	8.3	13.0	0.310
“	“	200	“	“	90	“	“	65	“	5.2	5.7	7.5	11.3	0.400
“	“	250	“	“	105	“	“	80	“	4.9	5.3	6.7	9.8	0.500

* Attachment With One Hole

All dimensions in millimetres unless otherwise stated.

Every effort has been taken to ensure that the data listed in this catalogue is correct. Challenge accepts no liability for any inaccuracies or damage caused.

Conveyor Chain Attachments

FV Series Attachments

Metric Conveyor Chain (DIN 8165)

FV Series Attachments

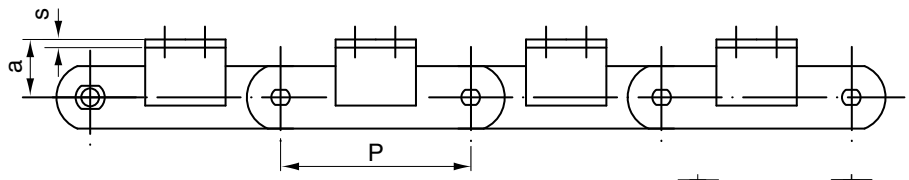

Note: Attachments are also available with 1, 2 or 3 holes and in K1, K2 and K3 (both sides) configuration

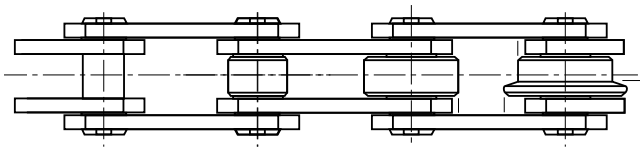

Type A Type B Type C Type D

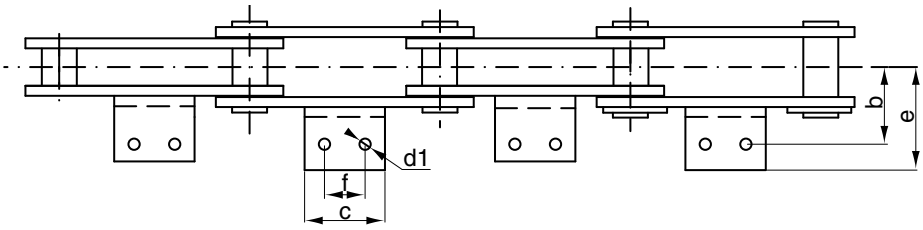

DIN Number	Chain Number	Pitch P	a	b	c	d1	e	f	Welded or Integral attachment	Chain Weight - Excluding Attachments kg/metre Type A	Type B	Type C	Type D	Attachment Weight (A2) kg each
FV140	C145	100	45	50	55	11	81	30	50x6	8.2	9.5	14.3	21.4	0.23
“	“	125	“	“	65	“	“	40	“	7.4	8.5	12.3	18.0	0.30
“	“	160	“	“	75	“	“	50	“	6.7	7.5	10.5	14.9	0.36
“	“	200	“	“	90	“	“	65	“	6.0	6.7	9.0	12.8	0.45
“	“	250	“	“	105	“	“	80	“	5.8	6.3	8.3	11.0	0.54
FV180	C190	125	45	64	63	13	91	35	63x8	10.5	12.4	18.9	31.3	0.32
“	“	160	“	“	80	“	“	50	“	10.2	11.7	16.7	26.5	0.41
“	“	200	“	“	95	“	“	65	“	9.6	10.8	14.8	25.9	0.52
“	“	250	“	“	110	“	“	80	“	8.9	9.8	13.0	19.3	0.62
“	“	315	“	“	130	“	“	100	“	8.3	9.0	11.6	16.6	0.72
FV250	C275	160	55	69	80	14	106	50	63x8	13.4	16.4	23.8	45.9	0.57
“	“	200	“	“	95	“	“	65	“	12.3	14.7	20.6	38.3	0.71
“	“	250	“	“	110	“	“	80	“	11.3	13.3	17.9	32.1	0.85
“	“	315	“	“	130	“	“	100	“	10.5	12.0	15.8	27.0	1.00
“	“	400	“	“	130	“	“	100	“	9.8	10.7	13.9	23.8	1.00
FV315	C370	160	60	85	50	14	130	*	70x8	20.4	24.9	33.3	67.8	0.52
“	“	200	“	“	95	“	“	65	“	18.5	22.1	28.9	56.4	0.98
“	“	250	“	“	110	“	“	80	“	17.0	20.0	25.3	47.3	1.13
“	“	315	“	“	130	“	“	100	“	15.9	18.2	22.4	39.9	1.34
“	“	400	“	“	130	“	“	100	“	15.0	16.8	20.2	34.0	1.34

* Attachment With One Hole

Every effort has been taken to ensure that the data listed in this catalogue is correct. Challenge accepts no liability for any inaccuracies or damage caused. All dimensions in millimetres unless otherwise stated.

Conveyor Chain

FVT/CE Series

Metric Conveyor Chain (DIN 8165)

FVT/CE Series Deep Link

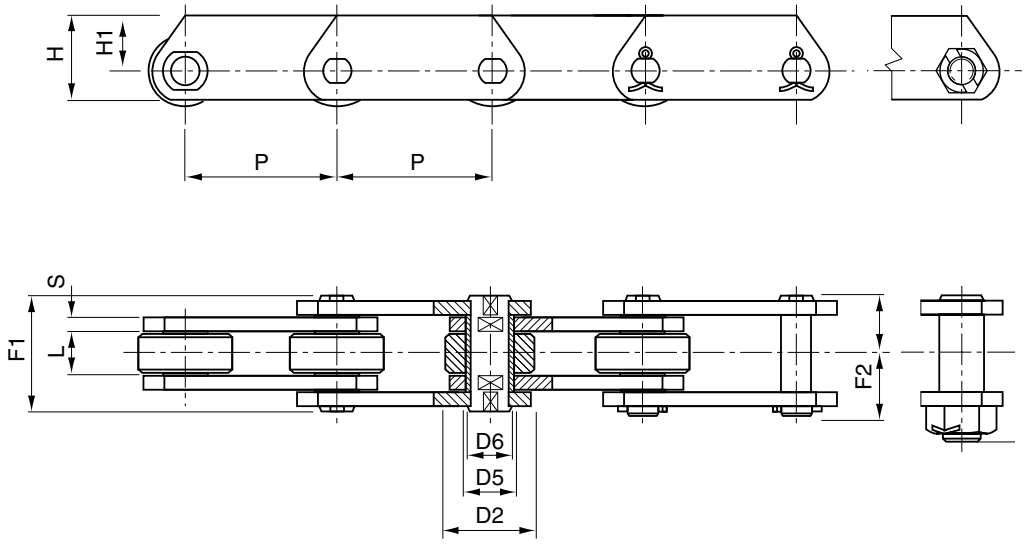

Deep Link

DIN Number	Chain number	P Pitch	L	H	H1	S	F1	F2	D2	D5	D6	Breaking Load kN	HT Breaking Load, kN	Weight kg/m
FVT40	CE42	50	18	35	22.5	3	36	21	32	15	10	42	47	5.0
“	“	63	“	“	“	“	“	“	“	“	“	“	“	4.3
“	“	80	“	“	“	“	“	“	“	“	“	“	“	3.8
“	“	100	“	“	“	“	“	“	“	“	“	“	“	3.4
“	“	125	“	“	“	“	“	“	“	“	“	“	“	3.0
FVT63	CE64	63	22	40	25	4	45	26	40	18	12	64	75	7.5
“	“	80	“	“	“	“	“	“	“	“	“	“	“	6.5
“	“	100	“	“	“	“	“	“	“	“	“	“	“	5.7
“	“	125	“	“	“	“	“	“	“	“	“	“	“	5.1
“	“	160	“	“	“	“	“	“	“	“	“	“	“	4.5
FVT90	CE100	63	25	45	27.5	5	53	30	48	20	14	100	115	11.7
“	“	80	“	“	“	“	“	“	“	“	“	“	“	10.0
“	“	100	“	“	“	“	“	“	“	“	“	“	“	8.7
“	“	125	“	“	“	“	“	“	“	“	“	“	“	7.7
“	“	160	“	“	“	“	“	“	“	“	“	“	“	6.8
“	“	200	“	“	“	“	“	“	“	“	“	“	“	5.8
“	“	250	“	“	“	“	“	“	“	“	“	“	“	5.4
FVT112	CE120	100	30	50	30	6	62	35	55	22	16	120	170	12.7
“	“	125	“	“	“	“	“	“	“	“	“	“	“	11.7
“	“	160	“	“	“	“	“	“	“	“	“	“	“	9.7
“	“	200	“	“	“	“	“	“	“	“	“	“	“	8.7
“	“	250	“	“	“	“	“	“	“	“	“	“	“	8.0

All dimensions in millimetres unless otherwise stated.

Every effort has been taken to ensure that the data listed in this catalogue is correct. Challenge accepts no liability for any inaccuracies or damage caused.

Conveyor Chain

FVT/CE Series

Metric Conveyor Chain (DIN 8165)

FVT/CE Series Deep Link

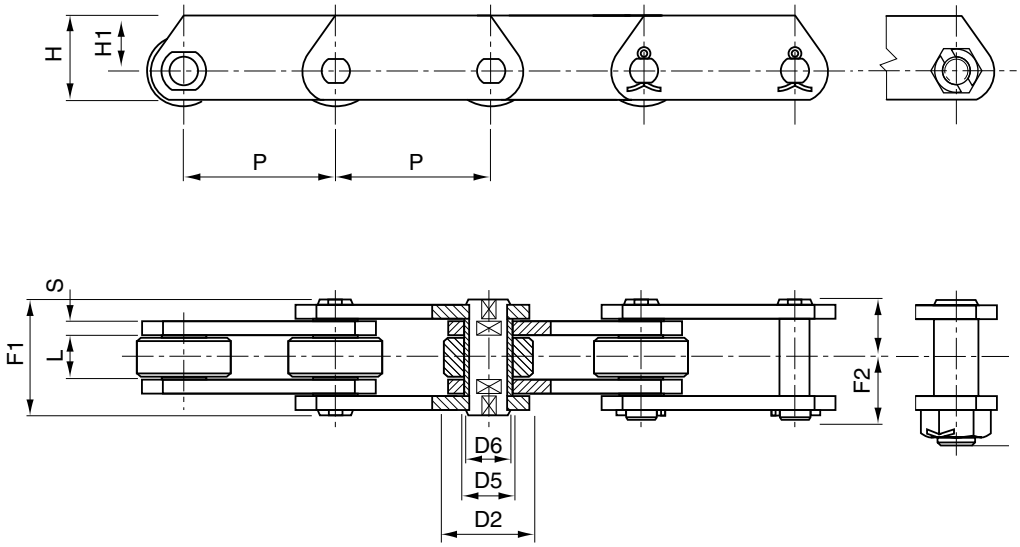

Deep Link

DIN Number	Chain Number	P Pitch	L	H	H1	S	F1	F2	D2	D5	D6	Breaking Load kN	HT Breaking Load, kN	Weight kg/m
FVT140	CE145	100	35	60	37.5	6	67	38	60	25	18	145	180	16.8
“	“	125	“	“	“	“	“	“	“	“	“	“	“	14.6
“	“	160	“	“	“	“	“	“	“	“	“	“	“	12.6
“	“	200	“	“	“	“	“	“	“	“	“	“	“	11.3
“	“	250	“	“	“	“	“	“	“	“	“	“	“	10.1
FVT180	CE190	125	45	70	45	8	86	49	70	30	20	190	250	24.2
“	“	160	“	“	“	“	“	“	“	“	“	“	“	20.8
“	“	200	“	“	“	“	“	“	“	“	“	“	“	18.4
“	“	250	“	“	“	“	“	“	“	“	“	“	“	16.5
“	“	315	“	“		“	“	“	“		“	“	“	14.9
FVT250	CE275	160	55	80	50	8	97	55	80	36	26	275	300	28.2
“	“	200	“	“	“	“	“	“	“	“	“	“	“	24.5
“	“	250	“	“	“	“	“	“	“	“	“	“	“	21.7
“	“	315	“	“	“	“	“	“	“	“	“	“	“	19.3
FVT315	CE295	160	65	90	55	10	26	70	90	42	30	370	480	39.9
“	“	200	“	“	“	“	“	“	“	“	“	“	“	34.8
“	“	250	“	“	“	“	“	“	“	“	“	“	“	30.6
“	“	315	“	“	“	“	“	“	“	“	“	“	“	27.3
“	“	400	“	“	“	“	“	“	“	“	“	“	“	24.5

Every effort has been taken to ensure that the data listed in this catalogue is correct. Challenge accepts no liability for any inaccuracies or damage caused. All dimensions in millimetres unless otherwise stated.

Conveyor Chain

FV/CR Series

Metric Conveyor Chain (DIN 8165)

Scraper Chain

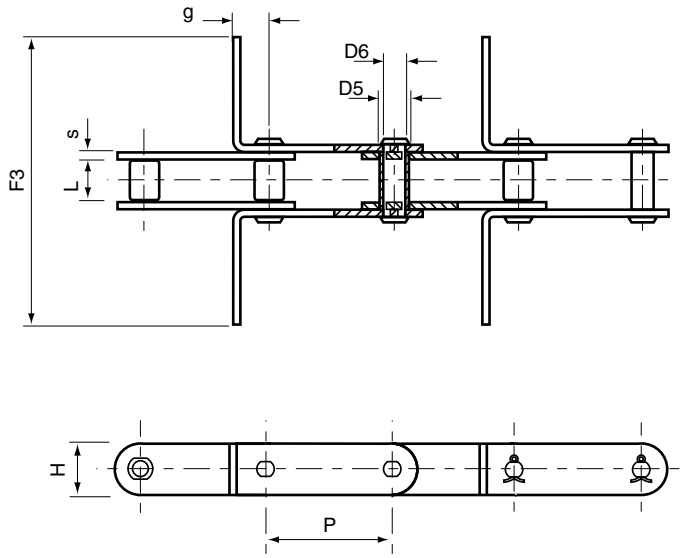

Note: Scraper length F3 is available in various lengths. Please provide required length on enquiry.

Scraper Chain

DIN Number	Chain Number	Pitch P	L	H	S	g	F3	D5	D6	Breaking Load kN	Weight kg/m
FV40	CR42	80	18	25	3	25	*	15	10	42	1.9
“	“	100	“	“	“	“	*	“	“	“	1.7
“	“	125	“	“	“	“	*	“	“	“	1.6
FV63	CR64	100	22	30	4	25	*	18	12	64	3.0
“	“	125	“	“	“	“	*	“	“	“	2.7
“	“	150	“	“	“	“	*	“	“	“	2.4
FV90	CR100	100	25	35	5	30	*	20	14	100	4.5
“	“	125	“	“	“	“	*	“	“	“	4.2
“	“	150	“	“	“	“	*	“	“	“	4.0
FV112	CR120	100	30	40	6	35	*	22	16	120	6.7
“	“	125	“	“	“	“	*	“	“	“	6.0
“	“	150	“	“	“	“	*	“	“	“	5.5
FV140	CR145	100	35	45	“	38	*	26	18	145	7.4
“	“	125	“	“	“	“	*	“	“	“	6.7
“	“	150	“	“	“	“	*	“	“	“	6.0
FV180	CR190	125	45	50	8	44	*	30	20	190	10.5
“	“	150	“	“	“	“	*	“	“	“	10.2
“	“	200	“	“	“	“	*	“	“	“	9.6
FV250	CR275	125	55	60	“	50	*	36	26	275	13.4
“	“	150	“	“	“	“	*	“	“	“	12.3
“	“	200	“	“	“	“	*	“	“	“	11.3

All dimensions in millimetres unless otherwise stated.

Every effort has been taken to ensure that the data listed in this catalogue is correct. Challenge accepts no liability for any inaccuracies or damage caused.

Conveyor Chain Attachments

Attachment Chain Designations

Attachment Chain Designations

M1-01

Attachment Orientation

M = Vertical one side

MK = Vertical both sides

A = Horizontal one side

K = Horizontal both sides

Mounting Holes

1 = Single Hole

2 = Double

3 = Triple

Frequency

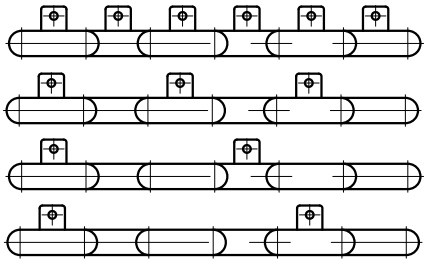

01 = Every side plate

02 = Every other side plate

03 = Every third side plate

04 = Every fourth side plate

Examples

A2-02

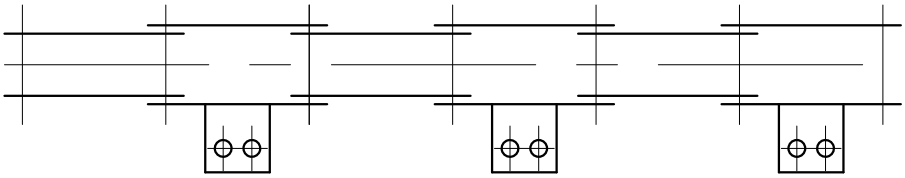

K3-01

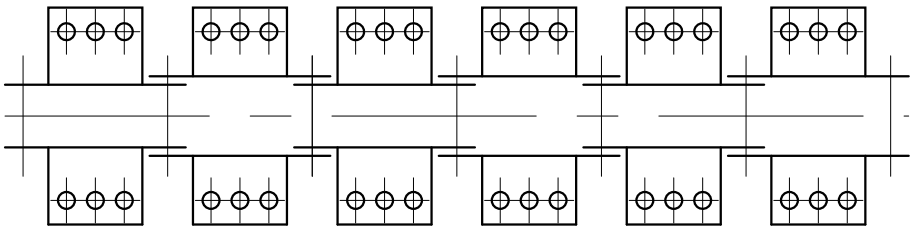

Every effort has been taken to ensure that the data listed in this catalogue is correct. Challenge accepts no liability for any inaccuracies or damage caused.

Block Chain

NF Block Chain

NF Block Chain

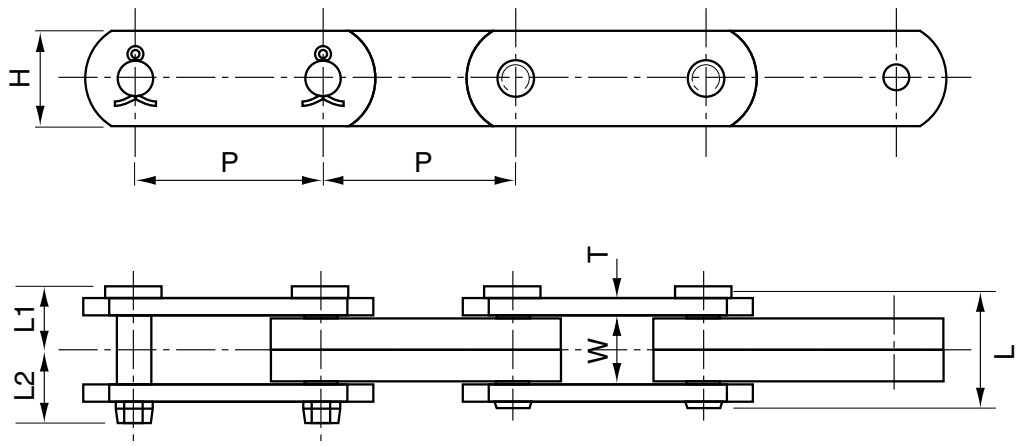

Chain number	Chain pitch	Roller diameter	Width between inner plates	Bearing pin diameter	Pin length			Side plate height	Plate thickness	Tensile strength	Approx weight
	P	R	W	D	L	L1	L2	H	T	kN(kgf)	kg/m
NF 30150	150.00	/	23.3	/	47.0	24.00	32.00	38.1	7.9	309(31500)	7.0
NF 30200	200.00	/	23.3	/	47.0	24.00	32.00	38.1	7.9	309(31500)	6.6
NF 40150	150.00	/	26.5	/	50.0	25.50	33.50	44.5	7.9	397(40500)	9.0
NF 40200	200.00	/	26.5	/	50.0	25.50	33.50	44.5	7.9	397(40500)	8.5
NF 56200	200.00	/	29.5	/	57.0	29.50	40.50	54	9.5	554(56500)	12.3
NF 56250	250.00	/	29.5	/	57.0	29.50	40.50	54	9.5	554(56500)	12.0
NF 63200	200.00	/	31.5	/	59.0	30.50	41.50	57	9.5	618(63000)	13.7
NF 63250	250.00	/	31.5	/	59.0	30.50	41.50	57	9.5	618(63000)	13.0
NF 70200	200.00	/	33.5	/	61.0	31.50	42.50	63.5	9.5	721(73500)	16.2
NF 70250	250.00	/	33.5	/	61.0	31.50	42.50	63.5	9.5	721(73500)	15.5
NF 90200	200.00	/	38	/	68.0	34.50	45.50	72	10.5	907(92500)	21.0
NF 90250	250.00	/	38	/	68.0	34.50	45.50	72	10.5	907(92500)	20.0
NF115250	250.00	/	40	/	76.0	38.00	49.00	76.2	12.7	1120(114000)	25.0
NF115300	300.00	/	40	/	76.0	38.00	49.00	76.2	12.7	1120(114000)	24.0
NF140250	250.00	/	47.5	/	84.0	44.00	54.00	85	14	1400(143000)	32.0
NF140300	300.00	/	47.5	/	84.0	44.00	54.00	85	14	1400(143000)	31.0
NF180300	300.00	/	52.5	/	94.0	48.50	58.50	95	16	1740(177500)	39.0
NF180350	350.00	/	52.5	/	94.0	48.50	58.50	95	16	1740(177500)	37.8
NF210300	300.00	/	59	/	101.0	51.50	61.50	110	16	2150(219500)	50.0
NF210350	350.00	/	59	/	101.0	51.50	61.50	110	16	2150(219500)	48.3
NF250300	300.00	/	66	/	114.0	58.50	68.50	112	19	2440(248500)	58.8
NF250350	350.00	/	66	/	114.0	58.50	68.50	112	19	2440(248500)	56.7
NF280300	300.00	/	67	/	115.0	58.50	68.50	122	19	2720(277500)	66.0
NF280350	350.00	/	67	/	115.0	58.50	68.50	122	19	2720(277500)	62.3

These chains consist of outer link plates, inner block links and pins.

All dimensions in millimetres unless otherwise stated.

Every effort has been taken to ensure that the data listed in this catalogue is correct. Challenge accepts no liability for any inaccuracies or damage caused.

Engineered Bush Chains

Engineered Steel Bush Chains

Engineered Steel Bush Chains

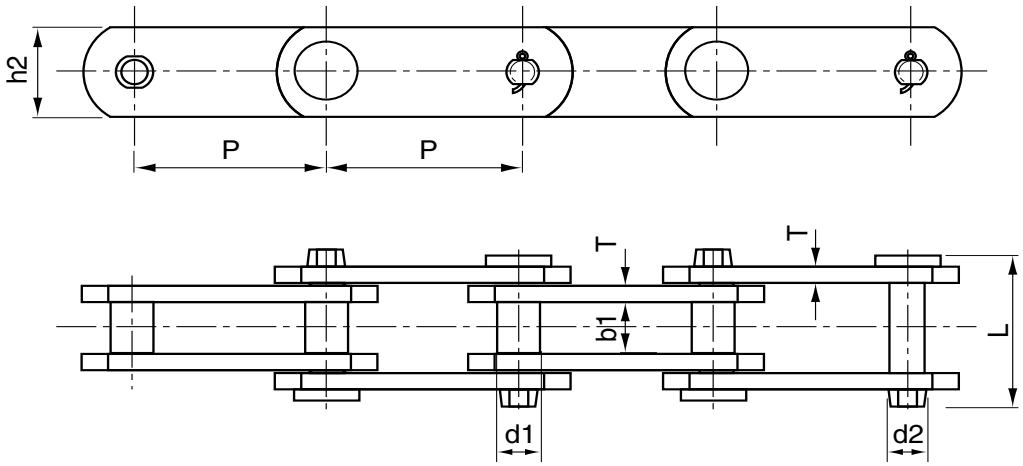

ANSI chain number	Challenge chain number	Pitch inches	Pitch mm	Bush diameter	Width between inner plates	Pin diameter	Pin length	Side plate height	Plate thickness	Average Tensile strength	Approx weight
		P	P	d1 max	b1 min	d2	L max	h2	T	kN/bf	kg/m
S102B	S102B	4.00	101.60	25.4	54.1	15.88	111.3	38.10	9.70	176.00	10.40
S110	S110	6.00	152.40	32	54.1	15.88	111.3	38.10	9.70	176.00	9.80
S111	S111	4.76	120.90	36.6	66.8	19.05	131.2	50.80	9.70	235.40	15.90
S131	S131	3.08	78.11	32	33.5	15.88	90.5	38.10	9.70	176.00	11.60
S150	S150	6.05	153.67	44.7	84.3	25.4	164.6	63.50	12.70	416.00	25.70
S188	S188	2.61	66.27	22.4	26.9	12.7	68.6	28.40	6.40	112.20	5.60
S856	S856	6.00	152.40	44.4	76.2	25.4	154.9	63.50	12.70	401.50	25.00
S857	S857	6.00	152.40	44.4	76.2	25.4	154.9	82.60	12.70	475.20	32.00
S859	S859	6.00	152.40	60.4	95.3	31.75	188.5	101.60	16.00	759.00	55.90
S864	S864	7.00	177.80	60.4	95.3	31.75	188.5	101.60	16.00	759.00	51.80

Every effort has been taken to ensure that the data listed in this catalogue is correct. Challenge accepts no liability for any inaccuracies or damage caused. All dimensions in millimetres unless otherwise stated.

Engineered Bush Chains

Engineered Steel Bush Chains Attachments A1 & K1

Engineered Steel Bush Chains Attachments A1 & K1

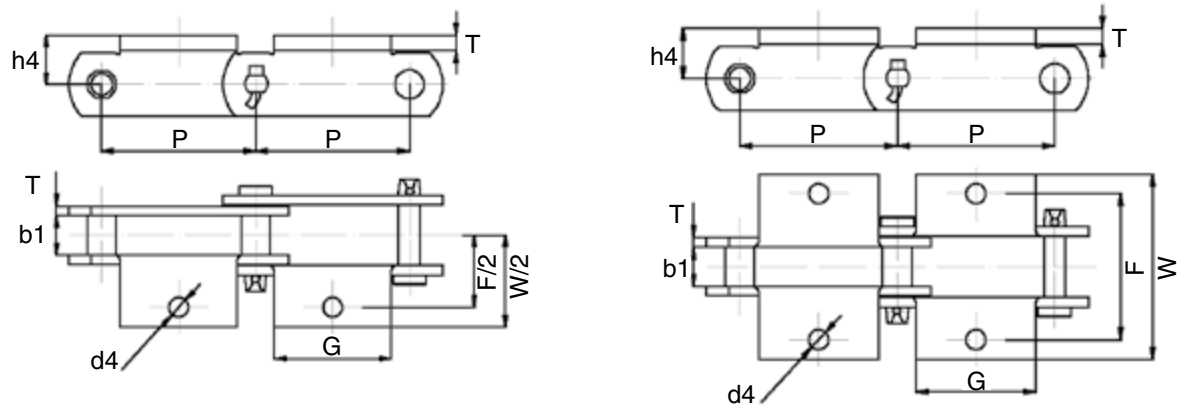

ANSI chain number	Challenge chain number	Pitch inches	Pitch mm	Attachment diameter					Plate thickness
		P	P	G	F	W	h4	d4	T
*S102B	*S102B	4.00	101.60	77.0	121.0	180.8	25.4	10.20	9.70
S131	S131	3.08	78.11	73.9	104.6	157	25.4	13.50	9.70
S188	S188	2.61	66.27	54.6	95.2	131.6	20.6	10.20	6.40

Engineered Steel Bush Chains Attachments A2 & K2

Engineered Steel Bush Chains Attachments A2 & K2

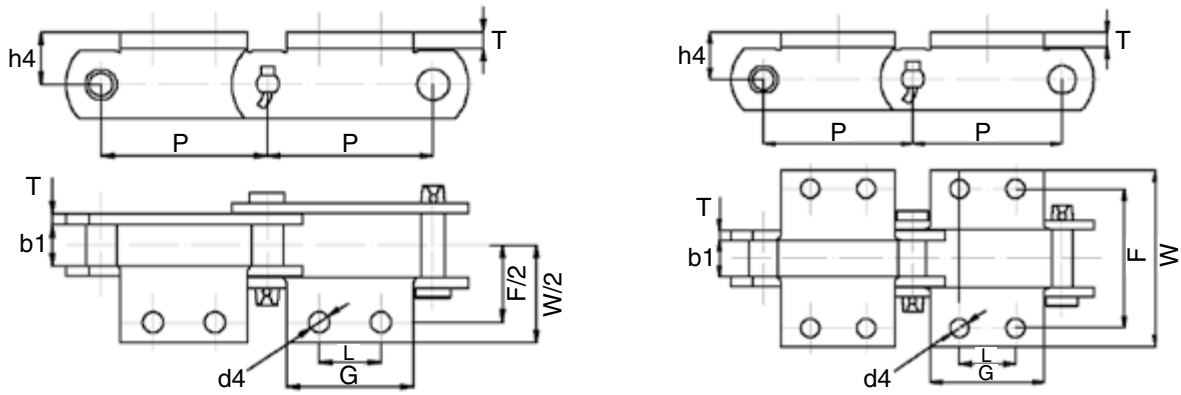

ANSI chain number	Challenge chain number	Pitch inches	Hole distance	Attachment diameter					Plate thickness
		P	L	G max	F	W max	h4	d4 min	T
*S102B	*S102B	101.60	44.50	69.9	134.9	180.8	25.4	10.20	9.70
S110	S110	152.40	44.50	89.6	134.9	180.8	25.4	10.20	9.70
S111	S111	120.90	58.70	92.7	158.8	210.8	38.1	13.50	9.70
S131	S131	78.11	38.10	73.9	104.6	157	25.4	13.50	9.70
S150	S150	153.67	69.90	108.7	190.5	249.4	47.8	13.50	12.70
S188	S188	66.27	31.80	54.6	106.4	131.6	20.6	8.60	6.40
S856	S856	152.40	63.50	103.1	184.2	241.3	47.8	16.80	12.70

All dimensions in millimetres unless otherwise stated. Every effort has been taken to ensure that the data listed in this catalogue is correct. Challenge accepts no liability for any inaccuracies or damage caused.

Engineered Bush Chains

Engineered Steel Bush Chains Attachments A22

Engineered Steel Bush Chains Attachments A22

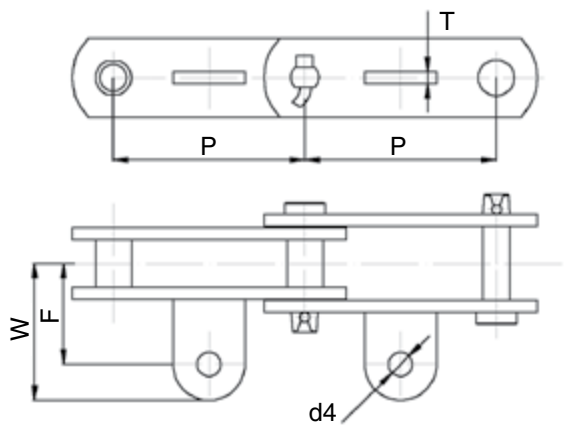

ANSI chain number	Challenge chain number	Pitch inches	Pitch mm	Attachment diameter					Plate thickness
		P	P	G	F	W	h4	d4	T
S188	S188	2.61	66.27	49.2	45.2	61.2	/	10.20	10.40
/	S188A22F1	2.61	66.27	32.0	45.2	61.2	/	12.00	6.40

Engineered Steel Bush Chains Attachments K3

Engineered Steel Bush Chains Attachments K3

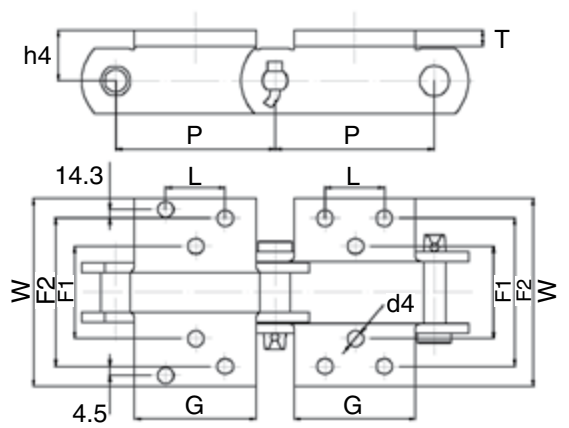

ANSI chain number	Challenge chain number	Pitch inches	Attachment diameter							Plate thickness
		P	G	L	F1	F2	W	h4	d4	T
S150	S150	153.67	109.5	69.9	190.5	292.1	347.5	47.80	13.50	13.5
S856	S856	152.40	152.4	69.9	166.6	277.9	349.3	47.80	13.50	13.5

Engineered Steel Bush Chains Attachments K35

Engineered Steel Bush Chains Attachments K35

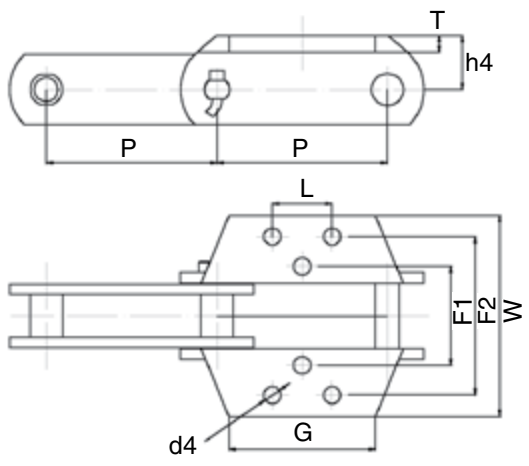

ANSI chain number	Challenge chain number	Pitch inches	Attachment diameter							Plate thickness
		P	G	L	F1	F2	W	h4	d4	T
S856	S856	152.40	146.1	63.5	184.2	298.5	349.3	47.80	16.80	13.5

Engineered Steel Bush Chains Attachments K44

Engineered Steel Bush Chains Attachments K44

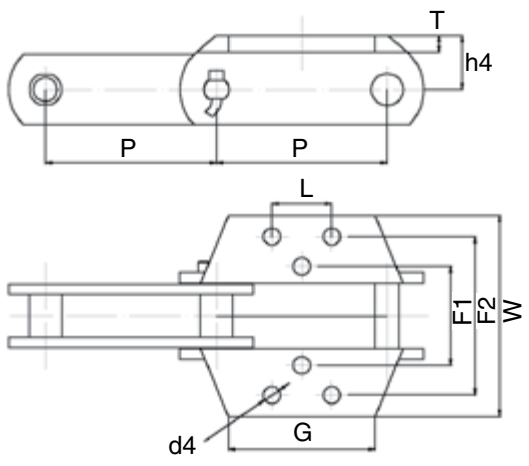

ANSI chain number	Challenge chain number	Pitch inches	Attachment diameter								Plate thick-ness
		P	G	L1	L2	F1	F2	W	h4	d4	T
S857	S857	152.40	146.1	88.9	88.9	177.8	304.8	355.60	63.50	13.5	13.5
S859	S859	152.40	146.1	114.3	69.9	228.6	330.2	381.00	76.20	16.8	13.5
S864	S864	177.80	146.1	139.7	95.3	228.6	330.2	381.00	76.20	16.8	13.5

Every effort has been taken to ensure that the data listed in this catalogue is correct. Challenge accepts no liability for any inaccuracies or damage caused. All dimensions in millimetres unless otherwise stated.

Drop Forged Chain

Rivetless Forged Chain

Rivetless Forged Chain

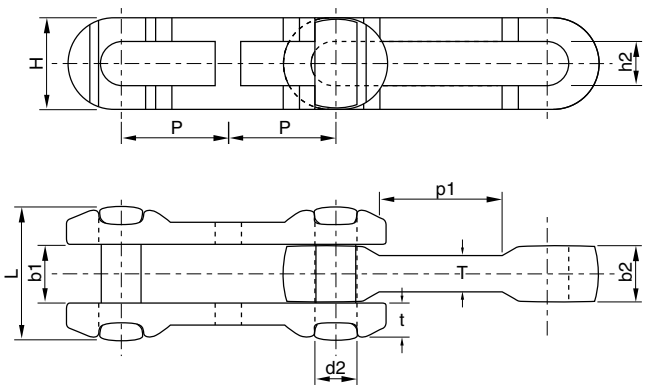

Chain number	Pitch mm P	Pin diameter d2	Pin length L	Center link gap h2 min	Chain height H max	Plate thickness t	Plate thickness T	Center link width b1	Ultimate tensile strength / kN Q min	Designation
X228	50.80	6.40	27.70	7.90	18.00	6.40	9.40	13.00	26.70	PHC X288...
X348	76.20	12.40	43.90	13.50	27.90	10.20	13.00	20.10	97.90	PHC X348...
X458	101.60	16.00	57.20	16.80	36.60	12.20	16.30	27.20	210.00	PHC X458...
X458XP*	101.60	16.00	57.20	16.80	36.60	12.20	16.30	27.20	255.00	PHC 468...
468	102.40	19.05	84.10	22.35	47.80	10.40	28.70	42.93	391.00	PHC 468H...
X678	152.40	22.10	77.00	24.10	51.60	17.80	21.10	34.30	380.00	PHC X658...
X678XP*	152.40	22.10	77.00	24.10	51.60	17.80	21.10	34.30	450.00	PHCX678...
698	152.40	28.70	95.25	31.75	65.00	14.20	25.40	41.40	650.00	PHC 678...
698XP*	152.40	28.70	95.25	31.75	65.00	14.20	25.40	41.40	720.00	PHC 698...
998	229.40	28.70	95.30	31.75	67.60	14.20	25.40	42.93	578.00	PHC XT100...
9118	229.40	35.00	124.00	38.10	76.20	19.80	33.30	51.10	979.00	PHC XT160...

Forged Chain

Rivetless Forged Chain

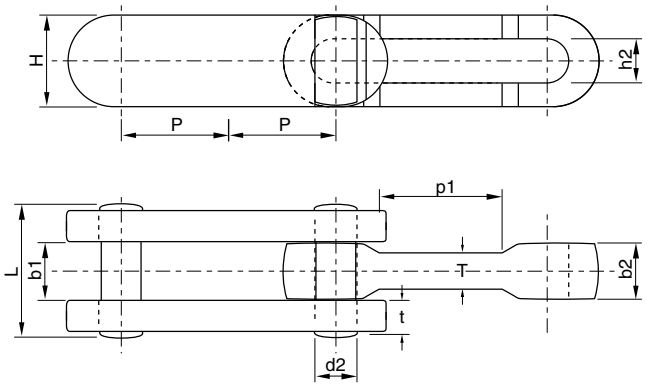

Chain number	Pitch mm P	Pin diameter d2	Pin length L	Center link gap h2 min	Chain height H max	Plate thickness t	Plate thickness T	Center link width b1	Ultimate tensile strength / kN Q min	Designation
S348	76.68	12.70	44.45	20.57	28.70	12.70	14.22	8.89	3.58	PHC S348...
S458	102.39	16.00	52.32	26.92	35.05	16.00	17.53	17.78	5.22	PHC S458...
S468	102.39	19.05	74.68	42.93	50.80	28.70	22.35	29.78	11.78	PHC S468...
S678	153.19	22.35	76.20	36.58	50.80	20.57	25.40	34.22	12.83	PHC S678...
S698	153.19	28.70	82.55	41.40	63.50	25.40	31.75	48.00	17.45	PHC S698...
S998	229.39	28.70	82.55	42.93	63.50	25.40	31.75	48.00	18.05	PHC S998...
S9118	229.39	35.05	111.25	54.10	76.20	33.27	38.10	81.33	34.75	PHC S9118...

All dimensions in millimetres unless otherwise stated. Every effort has been taken to ensure that the data listed in this catalogue is correct. Challenge accepts no liability for any inaccuracies or damage caused.

Drop Forged Chain

Drop Forged Chain Links

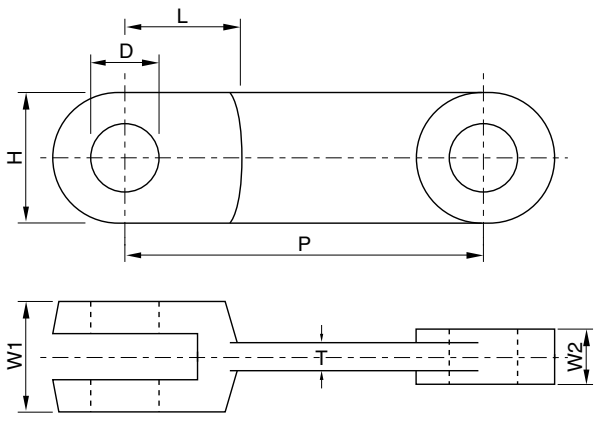

Chain number	Pitch mm P	H	W1	W2	T	L	D	*Weight kg	Min. UTS kN
102	102	36	28	12	7.6	32	14	0.44	150
142	142	50	42	20	11	46	25	1.26	300
142H	142	50	62	30	16.5	55	25	2.1	450
142T	142	50	62	30	16.5	55	25	2.1	600
200	200	60	62	28	20	58	25	3.2	500
216	216	72	58	25	18	60	35	4.6	582
260	260	75	70	31	20	79	32	5.65	700

* Weight including Pin and Circlip.

Nylon and welded steel flights available, eg:

Square Bar Flight **Flat Bar Flight** **Paddle Flight**

U Flight **Closed U Flight** **Close U Flight with Filler Plates**

OO Flight **OO Flight with Filler Plates** **Return Cup Flights**

Every effort has been taken to ensure that the data listed in this catalogue is correct. Challenge accepts no liability for any inaccuracies or damage caused. All dimensions in millimetres unless otherwise stated.